Bountiful City
Administrative Committee Agenda
Monday, October 27, 2025
3:00 p.m.

Notice is hereby given that the Bountiful City Administrative Committee will hold a meeting in the Planning Department Conference Room, Bountiful City Hall, located at 795 South Main Street, Bountiful, Utah, 84010, on the date and time provided. The public is invited to attend.

---

1. Welcome

2. Conditional Use Permit for a Detached Accessory Dwelling Unit at 685 East 1825 South
   Planning Technician Coleman

   - Review
   - Public Hearing
   - Action

3. Conditional Use Permit for a Cell Tower Upgrade at 120 West 1000 North
   Planning Technician Coleman

   - Review
   - Public Hearing
   - Action

4. Adjourn

Administrative Committee
Staff Report

Subject: Conditional Use Permit for a Detached Accessory Dwelling Unit at 685 East 1825 South
Authors: Rachel Coleman, Planning Technician
Date: October 27, 2025

Background
The applicant, Dan Guertler submitted a Conditional Use Permit (CUP) application for a Detached Accessory Dwelling Unit (DADU) located at **685 East 1825 South.** The site is located in the Single-Family Residential (R-3) subzone. The Bountiful City Administrative Committee reviews CUP applications for detached ADUs. The Bountiful City Land Use Code defines an ADU as "*A self-contained dwelling unit within an owner-occupied single-family residence or in a detached accessory structure located on an owner-occupied property. See Section 14-14-124.*"

Analysis
Section I - ADU Compliance. Staff reviewed the submitted application and finds that the proposed detached ADU complies with Land Use Code § 14-14-124(C) (below in italics). Staff findings for each standard are shown as underlined text.

1. *Shall be a conditional use only within the Single-Family Residential zone, Residential Multiple (RM) Family Zone, and the Downtown (DN) Mixed Use Zone; and shall not be permitted in any other zone.*

   The single-family dwelling is located within the Single-Family Residential (R-3) subzone.

2. *It is unlawful to allow, construct, or reside in an accessory dwelling unit within a duplex or multi-family residential building or property.*

   The site currently contains a single-family dwelling and the proposed ADU is in an accessory structure.

3. *It is unlawful to reside in, or allow to reside in, an accessory dwelling unit that has not received a conditional use permit or without written authorization from the Bountiful City Planning Department.*

   The applicant has submitted a CUP application for this detached ADU in order to be authorized to apply for a building permit to construct the proposed ADU.

4. *A maximum of one (1) accessory dwelling unit shall be permitted on a qualifying lot.*

   The applicant has submitted a CUP application for this one (1) detached ADU.

5. *It is unlawful to construct, locate, or otherwise situate an accessory dwelling unit on a lot or parcel of land that does not contain a habitable single-family dwelling.*

   The site contains an existing single-family dwelling.

6. *A deed restriction limiting the use of a property to a single-family dwelling, prepared by the Bountiful City Planning Director, and signed by all owners of the property on which an accessory dwelling unit is located, shall be recorded with the Davis County Recorder's Office prior to occupancy of the accessory dwelling unit. If a building permit is required, then said deed restriction shall be recorded prior to issuance of the building permit.*

   The Planning Director will prepare a deed restriction once the Administrative Committee approves this request, and all applicable conditions of approval are met. According to online records of the Davis County Assessor's Office, the subject property, parcel no. 050450024, is owned by Daniel Guertler.

7. *The property owner must occupy either the principal unit or the accessory dwelling unit as their permanent residence and at no time receive rent for the owner-occupied unit. An application for an accessory dwelling unit shall include proof of owner occupancy as evidenced by voter registration, vehicle registration, driver's license, county assessor records or other similar means required by the Planning Department.*

   The deed restriction will indicate that the property owner must either occupy the principal unit or the ADU as their permanent residence. The applicant is aware of the owner occupancy requirement.

8. *Separate utility meters shall not be permitted for the accessory dwelling unit.*

   The deed restriction will indicate such.

9. *It is unlawful to construct an accessory dwelling unit, or to modify a structure to include an accessory dwelling unit, without a building permit, if applicable.*

   Once the CUP is approved, the applicant will provide occupancy once the work is completed.

10. *Adequate off-street parking shall be provided for both the primary residential use and the accessory dwelling unit, and any driveway and parking area shall be in compliance with this Title. In addition to the parking required for the principal unit at the time of construction, one (1) off-street parking space shall be provided for an accessory dwelling unit. Any additional occupant vehicles shall be parked off street in City Code compliant parking areas. On-street parking may be utilized in compliance with the current parking limitations outlined in the Bountiful Traffic Code regarding on-street parking.*

According to Davis County Assessor's Office online records the existing single-family dwelling was built in 1960. According to Bountiful City Land Use Code the lot containing the primary dwelling was annexed into Bountiful City sometime between 1955-1965. By 1965, the property was located in the Single-Family Residential (R-1) subzone, which required one (1) off-street parking space for the primary dwelling. The current proposal requires a total of two (2) off-street parking spaces: one (1) for the primary residence and one (1) for the detached ADU. The site plan demonstrates that there is sufficient off-street parking to accommodate both the primary dwelling and the proposed ADU *(See Attachment 1, Site Plan).*

11. *Shall be at least three hundred fifty (350) square feet in size and shall not exceed one thousand two hundred fifty (1,250) square feet.*

    The proposed ADU is 1248 square feet *(See Attachment 3, Floor Plan).*

12. *Shall not be located on a lot with less than eight thousand (8,000) square feet buildable land.*

    According to Davis County Assessor's Office online records the lot area is 0.305 acres which equates to 13,286 square feet.

13. *Shall be configured so that any exterior doors, stairs, windows, or similar features are located as far away from adjoining properties as is reasonably possible to provide privacy to those properties.*

    Based on the ADU's location, including the placement of windows and doors in relation to surrounding properties, staff does not anticipate any privacy concerns. The north and east elevations are closest to the adjoining property. These elevations do not include any doorways, and all windows on both the main and upper levels will be screened and limited to a maximum size of four (4) feet in height and four (4) feet in width *(See Attachment 3, Floor Plan* and *Attachment 4, Elevations).*

14. *Shall meet all the setbacks required of an accessory structure.*

    See item (b) below, under Standard Height and Setbacks, of Section 14-4-105(J)(2)

15. *Shall be located behind the front building line of the principal unit.*

    The proposed ADU is approximately thirty-six (36) feet behind the front building line of the principal unit *(See Attachment 1, Site Plan).*

16. *The separate entrance of the accessory dwelling unit may be visible from the front or corner lot side yard based on proximity and appropriate mitigation.*

The entrance of the proposed detached ADU is located completely behind the existing single-family dwelling and is approx. fifty-six (56) feet from the front property line.

Section II - Accessory Structure Conditional Use Compliance. Staff reviewed the submitted application and finds that the proposed accessory structure complies with Bountiful City Land Use Code Section 14-4-105(J)(2) (below in italics). Staff findings for each standard are shown as underlined text.

a. *The total footprint of any and all accessory structures shall not exceed fifteen percent (15%) of the entire lot or parcel area, and no lot or parcel shall be reduced in area after the construction of an accessory building, such that it is in violation of this provision.*

   The lot is 13,286 square feet. Fifteen (15%) of the lot is 2,391 square feet. The proposed ADU is approximately 1,250 square feet. Complies.

b. *An accessory dwelling unit may comply with the following* ***Standard Height and Setbacks:***

Height	Maximum	Proposed
Maximum Height	20 feet	Approximately 17'6", complies
Sidewall Height	15 feet	All Elevations, Rear, Front, Right, and Left, are 14'10", complies

The proposed ADU meets the Reduced Setback requirements, which states that the ADU must be at least 10 feet behind the front building line of the primary structure. It will be approximately thirty-six (36) feet behind the front building line. The Reduced Setback standards are:

Setback	Minimum	Proposed
Side - Left	3 feet	84 feet (approx.), complies
Side - Right	3 feet	5 feet, complies
Rear	3 feet	5 feet, complies

c. *An accessory structure shall be located at least five (5) feet from a primary structure, including eaves, bay windows, chimneys and any other protrusion on either the accessory building or the primary structure.*

   The accessory structure is located six feet two inches (6'2") from the primary structure *(See Attachment 1, Site Plan).*

d. *No part of an accessory structure, excluding the eaves, shall be closer than twelve (12) feet to any primary dwelling on an adjacent property.*

Based on aerial photography the existing accessory structure complies with this standard.

e. *The eaves of an accessory structure shall be setback at least one (1) foot from any property line.*

The site and elevation plans show a five (5) foot setback with twelve (12) inch eaves, resulting in at least a four (4) foot eave setback from the rear and right, side yard property line, meeting code requirements (*See Attachment 4, Elevations*).

f. *An accessory structure shall be designed and constructed so as to prevent roof runoff from impacting an adjacent property.*

Based on the distance from all property lines the ADU will not impact roof runoff onto adjacent properties.

g. *An accessory structure shall meet all applicable provisions of the International Building Code.*

The proposed ADU shall comply with all applicable building codes.

h. *An accessory structure shall not encroach on any easements, recorded or otherwise.*

The proposed structure does not encroach on any easements (*see Attachment 1, Site Plan*)

i. *Accessory structures used or designed for vehicle parking shall be connected to the street by a paved driveway.*

Not applicable

Section III - CUP Mitigation. Staff reviewed the submitted application and finds that the proposed detached ADU is mitigated, as conditioned, based on Land Use Code § 14-2-506(C) (below in italics). Staff findings for mitigation are shown as underlined text.

A. *A conditional use permit shall be approved if reasonable conditions are proposed, or can be imposed, to mitigate the reasonably anticipated detrimental effects of the proposed use in accordance with the applicable standards.*

B. *If the reasonably anticipated detrimental effects of a proposed conditional use cannot be substantially mitigated by the proposal, or if the imposition of reasonable conditions to achieve compliance with applicable standards is not possible, the conditional use permit request may be denied.*

C. *Standards applicable to conditional uses include all the requirements of this Title, and consideration of the following:*

1. *The location of the proposed use in relationship to other existing uses in the general vicinity.*

2. *The effects of the proposed use and/or accompanying improvements on existing developments in the general vicinity;*

3. *The appropriate buffering of uses and buildings, proper parking and traffic circulation, and the use of building materials and landscaping which are in harmony with the area.*

   The color of the proposed ADU will be tan, matching the current color of the primary dwelling, and the material being used for the siding is Hardieplank Fiber Cement Lap Siding (*see Attachment 5, Permit Plans*).

Accessibility
Proposed walkway (*see Attachment 1, Site Plan*).

Department Review
This staff report was written by the Planning Technician and reviewed by the Senior Planner.

Significant Impacts
None.

Recommendation
Staff recommends that the Administrative Committee review the request, hold a public hearing, and approve the Conditional Use Permit allowing a detached accessory dwelling unit at **685 East 1825 South**, subject to the following conditions of approval:

1. The accessory dwelling unit shall meet all the standards in Section 14-14-124 of the City Land Use Code including, but not limited to, the following:

   a. The owner(s) of the property shall continually occupy the principal dwelling or the accessory dwelling unit.

   b. The property is to be used only as a single-family dwelling with a detached accessory dwelling unit and shall be subject to a deed restriction.

   c. There shall be no separate utility service connections.

2. Complete and record the ADU deed restriction prior to applying for a building permit.

3. The Applicant shall apply separately for a building permit to be reviewed and inspected by Staff.

Attachments

1. Site Plan
2-3. Floor Plan
4. Elevations
5-15. Permit Plans

685 East 1825 South

GEURTLER ADU

Reviewed by Planning Department

Rachel Coleman, Planning Technician
10/02/2025 5:35:30 PM

LOT COVERAGE AREA CALCULATION

LOT SIZE .305 ACRES = 13,286 SF
AREA OF BUILDINGS= 2,533 SF
AREA OF IMPERMEABLE PAVING = 1,241 SF

TOTAL IMPERMEABLE AREA = 3,774 SF

PERCENTAGE OF IMPERMEABLE AREA
3,774 SF / 13,286 SF = 28.18%

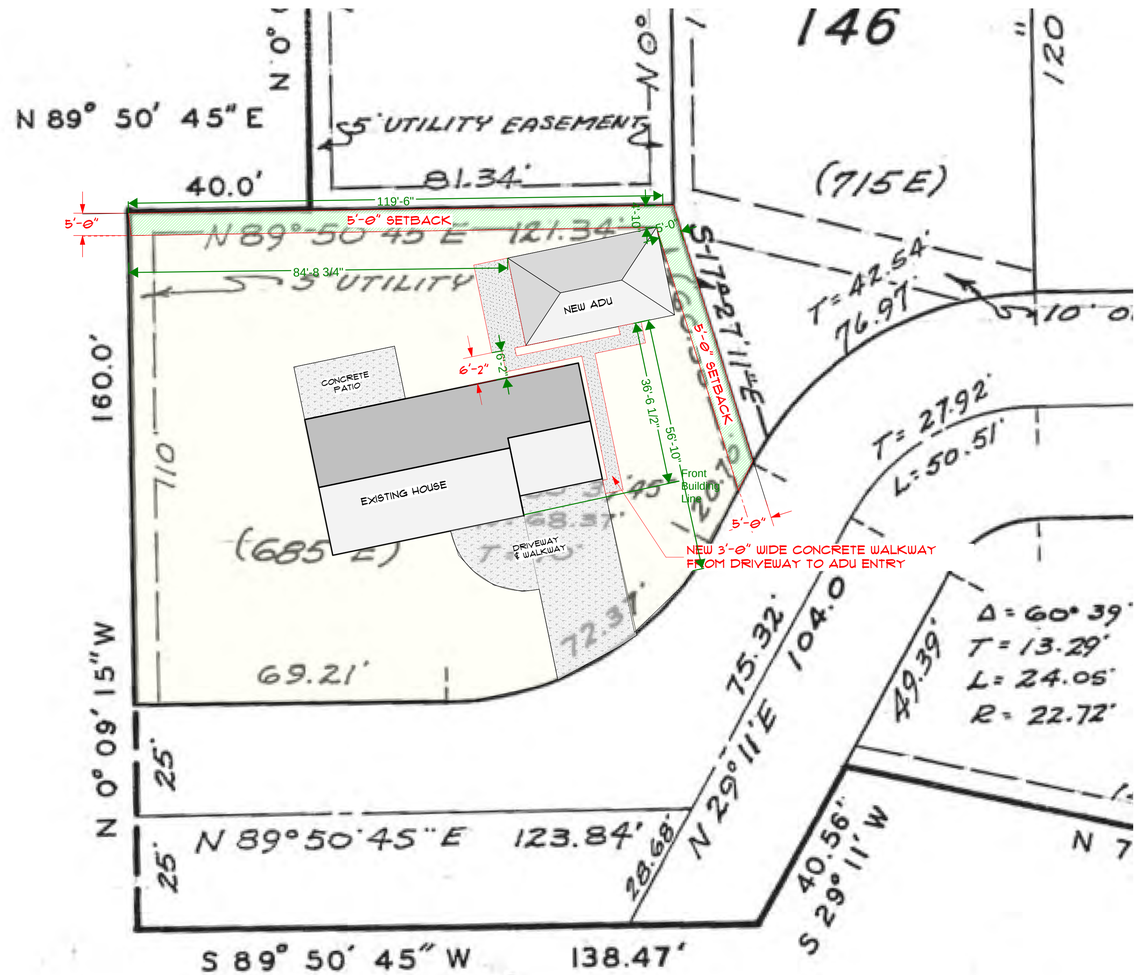

2 SITE PLAN
SCALE: 1/16" = 1'-0"

DRAWING INDEX	
A-001	COVER SHEET & LOT PLAN
A-004	PROJECT REQUIRMENTS
A-101	FLOOR PLANS & SCHEDULES
A-201	EXTERIOR ELEVATIONS
A-301	BUILDING SECTIONS & WALL SECTION
E-101	ELECTRICAL PLANS
S1.1	STRUCTURAL NOTES & DETAILS
S1.2	STRUCTURAL DETAILS
S1.3	STRUCTURAL DETAILS
S2.1	STRUCTURAL PLAN & NOTES
S2.2	STRUCTURAL PLAN & NOTES
S3.1	STRUCTURAL DETAILS
S4.1	STRUCTURAL DETAILS
S4.2	STRUCTURAL DETAILS
S4.3	STRUCTURAL DETAILS

Jul 24, 2025

kp2 architects
1234 s. 900 e.
slc, ut 84105
801-541-8593
kp2@kp2architects.com

GEURTLER ADU
685 E. 1825 S.
BOUNTIFUL, UTAH

Date
Revision
Project ID
Drawing Code
CAD File Name: Guertler ADU.vwx
Plot Date

STATE OF UTAH KENTON K. PETERS JR. NO. 10 LICENSED ARCHITECT

KP2 ARCHITECTS
1234 S 900 E
SALT LAKE CITY, UT 84105
801-541-8593
KP2@KP2ARCHITECTS.COM

All Rights Reserved
Copyright © 2022 KP2 PC - KENTON K. PETERS JR. - ARCHITECT
This drawing is an instrument of service and is the property of the architect and is protected under the 1976 copyright act. It is an exclusive work of original authorship. Unauthorized reproduction or distribution of this drawing or any part thereof, or any work based on this drawing may be reproduced by any method, nor may they be used or transferred to a third party without prior written consent of the architect.

Project Title: Geurtler ADU
Sheet Title: Cover Sheet, & Lot Plan
Scale: Jul 24, 2025
Sheet No. A-001 of 10

GENERAL CONDITIONS OF THE PROJECT

1. OWNERSHIP AND USE OF DRAWINGS, SPECIFICATIONS AND OTHER INSTRUMENTS OF SERVICE
1.1. The Drawings, Specifications and other documents prepared by the Architect and the Architect's consultants are Instruments of Service through which the Work to be executed by the Contractor is described. The Architect and the Architect's consultants shall be deemed the authors of the Drawings, Specifications and other documents and will retain all common law, statutory and other reserved rights, in addition to the copyrights. They are not to be used by the Contractor or any Subcontractor or material or equipment supplier on other projects or for additions to this Project outside the scope of the Work without the specific written consent of the Owner, Architect and the Architect's consultants.

2. INFORMATION AND SERVICES REQUIRED OF THE OWNER
2.1. The Owner shall, upon request, furnish to the Contractor information necessary and relevant for the Contractor to evaluate, give notice of or enforce mechanic's lien rights. Such information shall include a correct statement of the record legal title to the property on which the Project is located and the Owner's interest therein.
2.2. The Owner shall, upon request, and prior to commencement of the Work and thereafter, furnish to the Contractor reasonable evidence that financial arrangements have been made to fulfill the Owner's obligations under the Contract. After such evidence has been furnished, the Owner shall not materially vary such financial arrangements without prior notice to the Contractor.
2.3. The Owner shall furnish surveys describing physical characteristics, legal limitations and utility locations for the site of the Project, and a legal description of the site. The Contractor shall be entitled to rely on the accuracy of information furnished by the Owner but shall exercise proper precautions relating to the safe performance of the Work.

3. OWNER'S RIGHT TO STOP THE WORK
3.1. If the Contractor fails to correct Work which is not in accordance with the requirements of the Contract Documents or persistently fails to carry out Work in accordance with the Contract Documents, the Owner may issue a written order to the Contractor to stop the Work, or any portion thereof, until the cause for such order has been eliminated;
3.2. If the Contractor defaults or neglects to carry out the Work in accordance with the Contract Documents and fails within a seven-day period after receipt of a written notice from the Owner to commence and continue correction of such default or neglect with diligence and promptness, the Owner may, without prejudice to other remedies the Owner may have, correct such deficiencies. In such case an appropriate Change Order shall be issued deducting from payments then or thereafter due the Contractor the reasonable cost of correcting such deficiencies, including Owner's expenses and compensation for the Architect's additional services made necessary by such default, neglect or failure. Such action by the Owner and amounts charged to the Contractor are both subject to prior approval of the Architect. If payments then or thereafter due the Contractor are not sufficient to cover such amounts, the Contractor shall pay the difference to the Owner.

4. REVIEW OF CONTRACT DOCUMENTS AND FIELD CONDTIONS BY CONTRACTOR
4.1. Since the Contract Documents are complementary, before starting each portion of the Work, the Contractor shall carefully study and compare the various Drawings and other Contract Documents relative to that portion of the Work, shall take field measurements of any existing conditions related to that portion of the Work and shall observe any conditions at the site affecting it. Any design errors or omissions noted by the Contractor during this review shall be reported promptly to the Architect, but it is recognized that the Contractor's review is made in the Contractor's capacity as a contract and not as a licensed design professional. The Contractor is not required to ascertain that the Contract Documents are in accordance with applicable laws, statutes, ordinances, building codes, and rules and regulations, but any nonconformity discovered by or made known to the Contractor shall be reported promptly to the Architect.
4.2. If the Contractor performs Work knowing it to be contrary to laws, statutes, ordinances, building codes, and rules and regulation without such notice to the Architect and Owner, the Contractor shall assume appropriate responsibility for such Work and shall bear the costs attributable to correction.

5. LABOR AND MATERIALS
5.1. Unless otherwise provided in the Contract Documents, the Contractor shall provide and pay for labor, materials, equipment, tools, construction equipment and machinery, water, heat, utilities, transportation, and other facilities and services necessary for proper execution and completion of the Work.
5.2. The Contractor may make substitutions only with the consent of the Owner, after evaluation by the Architect and in accordance with a Change Order.
5.3. The Contractor warrants to the Owner and Architect that materials and equipment furnished under the Contract will be of good quality and new unless otherwise required or permitted by the Contract Documents, that the Work will be free from defects not inherent in the quality required or permitted, and that the Work will conform to the requirements of the Contract Documents. Work not conforming to these requirements, including substitutions not properly approved and authorized, may be considered defective. The Contractor's warranty excludes remedy for damage or defect caused by abuse, modifications not executed by the Contractor, improper or insufficient maintenance, improper operation, or normal wear and tear and normal usage. If required by the Architect, the Contractor shall furnish satisfactory evidence as to the kind and quality of materials and equipment.

5.4. PERMITS, FEES AND NOTICES
5.4.1. Unless otherwise provided in the Contract Documents, the Contractor shall secure and pay for the building permit and other permits and governmental fees, licenses and inspections necessary for proper execution and completion of the Work which are customarily secured after execution of the Contract and which are legally required when bids are received or negotiations are concluded.

6. SHOP DRAWINGS, PRODUCT DATA AND SUBMITTALS
6.1. Shop Drawings, Product Data, Samples and similar submittals are not Contract Documents. The purpose of their submittal is to demonstrate for those portions of the Work for which submittals are required by the Contract Documents the way by which the Contractor proposes to conform to the information given and the design concept expressed in the Contract Documents.
6.2. The Architect will review and approve or take other appropriate action upon the Contractor's submittals such as Shop Drawings, Product Data, Samples, but only for the limited purpose of checking for conformance with information given and the design concept expressed in the Contract Documents. Review of such submittals is not conducted for the purpose of determining the accuracy and completeness of other details such as dimensions and quantities, or for substantiating instructions for installation or performance of equipment or systems, all of which remain the responsibility of the Contractor as required by the Contract Documents. The Architect's review shall not constitute approval of safety precautions or of any construction means, methods, techniques, sequences or procedures. The Architect's approval of a specific item shall not indicate approval of an assembly of which the item is a component.
6.3. By approving and submitting Shop Drawings, Product Data, Samples and similar submittals, the Contractor represents that the Contractor has determined and verified materials, field measurements and field construction criteria related thereto, or will do so, and has checked and coordinated the information contained within such submittals with the requirements of the Work and of the Contract Documents.
6.4. The Contractor shall perform no portion of the Work for which the Contract Documents require submittal and review of Shop Drawings, Product Data, Samples or similar submittals until the respective submittal has been approved by the Architect.

7. CHANGES IN THE WORK
7.1. Changes in the Work may be accomplished after execution of the Contract, and without invalidating the Contract, by Change Order or order for a minor change in the Work.
7.2. A Change Order shall be based upon agreement among the Owner, Contractor and Architect; an order for a minor change in the Work may be issued by the Architects alone.
7.3. A Change Order is a written instrument prepared by the Architect and signed by the Owner, Contractor and Architect, stating their agreement upon all of the following:
7.3.1.1. Change in the Work
7.3.1.2. The amount of the adjustment, if any, in the Contract Sum
7.3.1.3. The extent of the adjustment, if any, in the Contract Time
7.4. The Architect will have authority to order minor changes in the Work not involving adjustment in the Contract Sum or extension of the Contract Time and not inconsistent with the intent of the Contract Documents. Such changes shall be effected by written order and shall be binding on the Owner and Contractor. The Contractor shall carry out such written orders promptly.

8. INSURANCE
8.1. Contractor's Liability Insurance
8.1.1. The Contractor shall purchase from and maintain in a company or companies lawfully authorized to do business in the jurisdiction in which the Project is located, such insurance as will protect the Contractor from claims set forth which may arise out of or result from the Contractor's operations under the Contract and for which the Contractor may be legally liable, whether such operations be by the Contractor or by a Subcontractor or by anyone directly or indirectly employed by any of them, or by anyone for whose acts any of them may be liable.
8.1.2. The insurance required shall be written for not less than limits required by law. Coverage, whether written on an occurrence or claims-made basis, shall be maintained without interruption from date of commencement of the Work until date of final payment and termination of any coverage required to be maintained after final payment.
8.2. Owner's Liability Insurance and Property Insurance
8.2.1. The Owner shall be responsible for purchasing and maintaining the Owner's usual liability insurance
8.2.2. Unless otherwise provided, the Owner shall purchase and maintain, maintain in a company or companies lawfully authorized to do business in the jurisdiction in which the Project is located, property insurance written on a builder's risk "all-risk" or equivalent policy form in the amount of the initial Contract Sum, plus value of subsequent Contract modifications and cost of materials supplied or installed by others, comprising total value for the entire Project at the site on a replacement cost basis without optional deductibles. Such property insurance shall be maintained until final payment has been made or until no person or entity other than the Owner has in insurable interest in the property, whichever is later.

9. CORRECTION OF WORK
9.1. Before or After Substantial Completion
9.1.1. The Contractor shall promptly correct Work rejected by the Architect or failing to conform to the requirements of the Contract Documents, whether discovered before or after Substantial Completion and whether or not fabricated, installed or completed. Cost of correcting such rejected Work, including additional testing and inspections and compensation for the Architect's services and expenses made necessary thereby, shall be at the Contractor's expense.
9.2. After Substantial Completion
9.2.1. If, within one year after the date of Substantial Completion of the Work, any of the Work is found to be not in accordance with the requirements of the Contract Documents, the Contractor shall correct it promptly after receipt of written notice from the Owner to do so unless the Owner has previously given the Contractor a written acceptance of such condition. The Owner shall give such notice promptly after discovery of the condition. During the one-year period for correction of Work, if the Owner fails to notify the Contractor and give the Contractor an opportunity to make the correction, the Owner waives the rights to require correction by the Contractor and to make a claim for breach of warranty.
9.3. Acceptance of Nonconforming Work
9.3.1. If the Owner prefers to accept Work which is not in accordance with the requirements of the Contract Documents, the Owner may do so instead of requiring its removal and correction, in which case the Contract Sum will be reduced as appropriate and equitable. Such adjustment shall be effected whether or not final payment has been made.

SUPPLEMENTAL CONDITIONS OF THE PROJECT

1. **GENERAL**
1.1. All Articles in these General and Supplemental Conditions are applicable to all Divisions and Sections of the work included herein, and all contractors must abide by the requirements set forth. These Conditions shall apply with equal force and effect to all contractors engaged in this work.
1.2. Each contractor, subcontractor or material supplier shall inform himself as to conditions relating to execution of work of his Division or Section. Neglect of this requirement will not be accepted as cause for additional compensation.

2. **LAYOUT**
2.1. The General Contractor shall, immediately upon entering the site for purpose of beginning work, locate general reference points and take such action as is necessary to prevent their destruction. He shall lay out his own work and be responsible for all lines, elevations and measurements of the building, utilities and other work executed by him under the Contract. He must exercise proper precaution to verify figures on Drawings before laying out work and will be held responsible for any error resulting from his failure to exercise such precaution.
2.2. Use a known point or elevation on existing site grade as datum elevation. This point or elevation is shown on the Site Plan drawing. Other grades, lines, levels and bench marks shall be established and maintained by the General Contractor, who shall be responsible for them.
2.3. As work progresses, the General Contractor shall lay out on forms and floor exact locations of all partitions as a guide to all trades, fix column center lines and walls.
2.4. Each contractor shall verify grades, lines, levels, locations, and dimensions as shown on Drawings and report any errors or inconsistencies to Architect before commencing work. Starting of work by the contractor shall imply his acceptance.

3. **SUPERVISION**
3.1. The General Contractor shall take complete charge of the work under his contract. As a part of his contract he shall coordinate the work of all trades and all phases of general, structural, plumbing, heating ventilating and air-conditioning, electrical and other work. The General Contractor shall establish all lines, layout and levels for use by all trades on the project.

4. **COORDINATION**
4.1. Subcontractors for plumbing, heating and ventilating, and electrical work shall check and cross-check drawings and specifications of other trades to inform themselves of the work interrelated to their own.
4.2. It is the responsibility of all contractors to coordinate their work with others so as to avoid delay.
4.3. Contractors shall determine as far in advance as possible the exact size of openings and guarantee them to the General Contractor.

5. **TEMPORARY TOILETS**
5.1. If no toilets are available in the existing building contractor shall provide on the job site a portable toilet available to all contractors and subcontractors workers. This toilet shall be maintained at required intervals so as to be clean, odor-free and of adequate capacity for its usage.

6. **THIS SECTION NOT USED**

7. **TEMPORARY WATER SUPPLY**
7.1. Contractor shall supply water as required for the project.

8. **TEMPORARY ELECTRICAL WORK**
8.1. Contractor shall supply electrical power as required for project.

9. **TEMPORARY FIRE PROTECTION**
9.1. The General Contractor shall provide and maintain in working order during the entire construction period a minimum of two fire extinguishers on the floor level on which they are working. Such other fire protective equipment and devices as he deems necessary and suitable for any possible class or type of fire shall also be provided. They shall be non-freeze types, such as A-B-C rated dry chemical extinguishers of not less than 10-pound capacity each.

10. **STORAGE OF MATERIALS**
10.1. All contractors shall confine their equipment, apparatus, storage of materials and operations to limits indicated by the directions of Architect and none shall bring material onto the site until it is needed for the progress of the work.
10.2. The Owner assumes no responsibility for materials stored in building or on the site. The contractor assumes full responsibility for damage due to storing of materials.

11. **PROTECTION IN GENERAL**
11.1. Work shall comply with the standards set by the Occupational Safety and Health Administration (OSHA) of the United States.
11.2. Precaution shall be exercised at all times for the protection of persons (including employees) and property. The safety provisions of all applicable laws, building and construction codes shall be observed.
11.3. The General Contractor and all Subcontractors shall:
11.3.1. Provide, erect and maintain all required planking, barricades, guard rails, temporary walkways, etc., of sufficient size and strength necessary for protection of material storage, sidewalks, curbs, streets, drives, adjoining property and the building as well as to prevent accidents to the public and the workmen at the job site.
11.3.2. All materials, persons, vehicles and equipment shall remain on graded surfaces only. Contractor shall provide protection for existing landscape including trees, shrubs, boulders,etc. Damaged landscape shall be repaired or replaced, Repair and replacement work shall be accomplished by the General Contractor and paid for by the contractor responsible for the damage. If responsibility cannot be fixed the cost of repair or replacement shall be prorated among contractors on the project.
11.3.3. Provide protection against rain, snow, wind, ice, storms or heat so as to maintain all work, materials, apparatus, and fixtures incorporated in the work or stored on the site free from injury or damage. At the end of the day's work cover all new work likely to be damaged. Remove snow and ice as necessary for safety and proper execution of the work.
11.3.4. Protect the building from damage at all times from rain, water, ground water, backup from drains or sewers, and all other water. Provide all equipment and enclosures necessary to provide this protection.
11.3.5. General Contractor shall provide, erect and maintain all temporary enclosures required to make the existing building weather tight where openings have been exposed due to work under this Contract.

12. **PROTECTION OF FINISHED CONSTRUCTION**
12.1. Each contractor shall assume the responsibility for the protection of all finished construction under his contract and shall repair and restore any and all damage of finished work to its original state.
12.2. Where responsibility can be fixed, the cost shall be charged to the party responsible. If responsibility cannot be fixed, the cost shall be prorated among all contractors in proportion to their activities at the building at the time the damage was done.
12.3. No wheeling of any loads over finished floors, either with or without plank protection will be permitted in anything except rubber-tired wheelbarrows, buggies, trucks or dollies. This applies to all finished floors and to all exposed concrete floors as well as those covered with composition tile or other applied surfacing, and shall apply to all contractors and subcontractors.
12.4. Where structural concrete is also the finished surface care must be taken to avoid marking or damaging those surfaces.

13. **COLD WEATHER PROTECTION**
13.1. All heating and covering required to protect the work from injury due to freezing or moisture during the construction period shall be classed as COLD WEATHER PROTECTION. Such protection shall be provided by each prime contractor for the protection of his own work.
13.2. All heating units must be approved type. Proper ventilation must be provided. The use of temporary units which may damage materials will not be allowed.
13.3. Equipment used for heat as well as the entire surrounding area shall be kept in a clean and safe condition.

14. **GENERAL CLEANING**
14.1. It shall be the duty of the Contractor to keep the premises free of accumulations of surplus materials and rubbish caused by his operations and the operations of his subcontractors. Combustible rubbish and debris shall be removed immediately.
14.2. The trades shall remove their rubbish and debris from the building site promptly upon its accumulation and in no event later than the General Contractor's regular Friday cleanup. Each Friday afternoon, and more often if necessary, the General Contractor shall perform all overall cleanup of the entire site including a broom cleaning of all appropriate surfaces.
14.3. Burning of rubbish on the site will not be permitted.
14.4. Besides the general broom cleaning, the General Contractor shall remove all glazing compound and sealant, stains and paint from all glass and wash and polish glass. Take care not to scratch glass. The General Contractor will be held responsible for all damaged, broken, or scratched glass and at completion, he shall replace all such glass.
14.5. Remove all marks, stains, fingerprints and other soil or dirt from all painted, enameled or varnished work and all other exposed finished surfaces.

15. **FINAL CLEANING**
15.1. The General Contractor is responsible for expediting the cleaning, washing, waxing, and polishing for the project. In addition, the General Contractor shall perform final cleaning to remove all foreign matter, spots, soil, and construction dust so as to put the project in a complete and finished condition ready for acceptance and use intended.
15.2. Other contractors shall similarly perform at such time an equally thorough cleaning of work and equipment provided under their contracts.
15.3. Contractor must remove all construction related materialsl, debris and waste from the site. If a contractor does not remove rubbish or clean the building as specified above, the Owner reserves the right to have work done by others. The cost of work done others will be deducted from monies due the contractor.

16. **OPERATING AND MAINTENANCE INSTRUCTIONS**
16.1. For each and every item of equipment and devices furnished or erected by the contractor prior to "Substantial Completion", each contractor shall provide the Owner with the original set of the following:
16.1.1. Catalog data or literature
16.1.2. Manufacturer's operating instructions
16.1.3. Manufacturer's maintenance instructions
16.1.4. Installation instructions
16.2. In each of these, the correct model number shall be checked off in ink where the literature covers more than one model number.

17. **FINAL CLOSE-OUT**
17.1. To indicate that all debts and claims against this project have been paid in full or otherwise satisfied and to give final evidence of release of all liens against the project and its Owner, the contractor shall submit a certification to that effect.

18. **TESTS AND ADJUSTMENTS**
18.1. The complete installation, consisting of the several parts and systems and all equipment installed according to the requirements of the Contract Documents shall be ready in all respects for use by the Owner and shall be subjected to a test a full operating conditions and pressures for normal conditions of use.

19. **LOOSE AND DETACHABLE PARTS**
19.1. The contractor shall retain all loose and small detachable parts of apparatus and equipment furnished under this Contract until completion of the work, then shall turn them over to the Owner.

STATE OF UTAH
KENTON A. PETERS JR.
NO. 1416
LICENSED ARCHITECT

Jul 24, 2025

kp2 architects
1234 s. 900 e.
slc, ut 84105
801-541-8593
kp2@kp2architects.com

GEURTLER ADU
685 E. 1825 S.
BOUNTIFUL, UTAH

Date
Revision
Project ID
Drawing Code
CAD File Name Guertler ADU.vwx
Plot Date

STATE OF UTAH
KENTON A. PETERS JR.
NO. 1416
LICENSED ARCHITECT

KP2 ARCHITECTS
1234 S 900 E
SALT LAKE CITY, UT 84105
801-541-8593
KP2@KP2ARCHITECTS.COM

All Rights Reserved
Copyright © 2022 KP2 P.C. - KENTON A. PETERS JR. - ARCHITECT
This drawing is classified as part of an unpublished collection of visual art under the 1978 copyright act. It is an exclusive work of original authorship. None of the pictorial, graphic or technical charts or drawings depicted on this sheet may be reproduced by any method, nor may they be used or re-used for any purpose without the express prior written permission of the architect.

Project Title: Geurtler ADU
Sheet Title: Project Requirements
Scale: Jul 24, 2025
Sheet No.: A-002 of 10

Reviewed by Planning Department

Rachel Coleman, Planning Technician
10/02/2025 5:35:43 PM

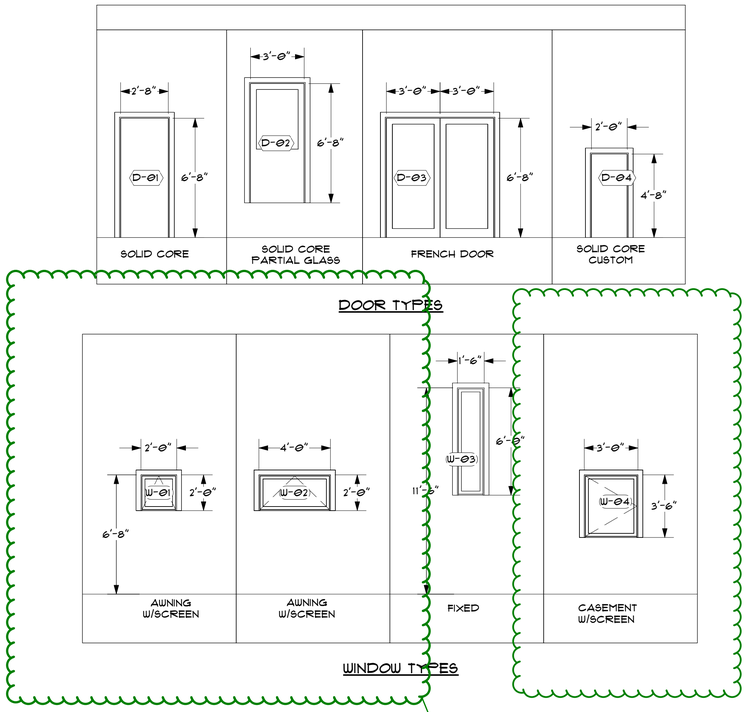

The proposed ADU will not include any doorways on the north or east elevations. Windows on these sides will be limited to no more than 4 feet in height and width.

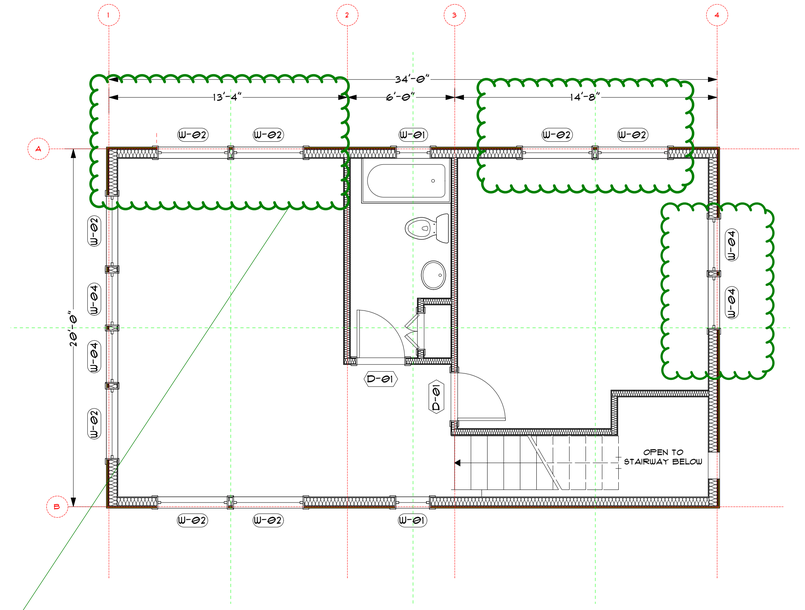

2 UPPER LEVEL PLAN
SCALE: 1/4" = 1'-0"

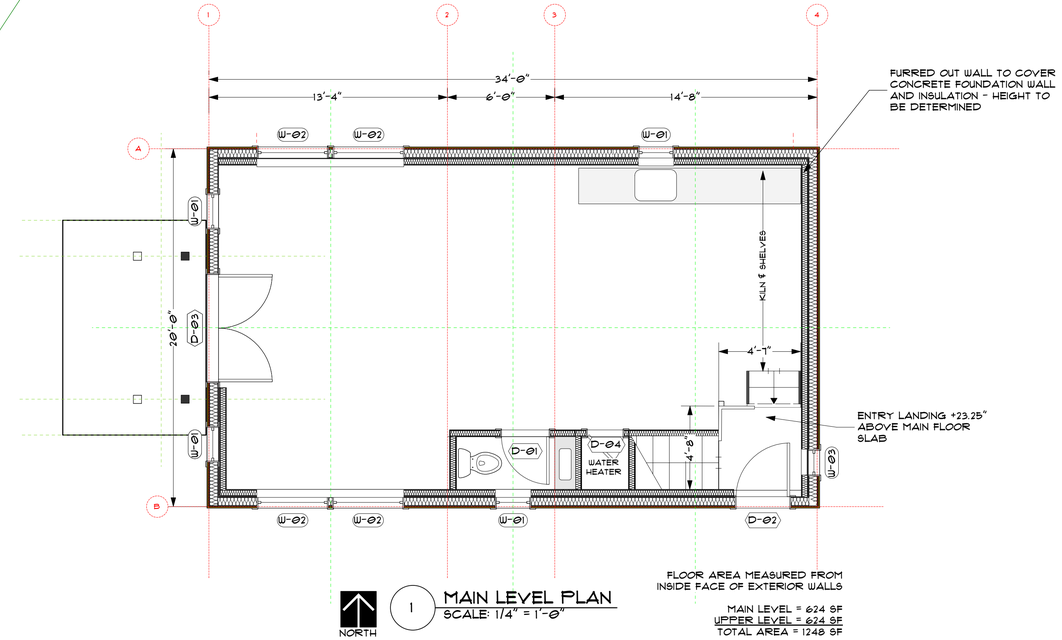

1 MAIN LEVEL PLAN
SCALE: 1/4" = 1'-0"

FLOOR AREA MEASURED FROM INSIDE FACE OF EXTERIOR WALLS

MAIN LEVEL = 624 SF
UPPER LEVEL = 624 SF
TOTAL AREA = 1248 SF

0 8 12 16 20 24 FT

Jul 24, 2025

kp2 architects
1234 s. 900 e.
slc, ut 84105
801-541-8593
kp2@kp2architects.com

GEURTLER ADU
685 E. 1825 S.
BOUNTIFUL, UTAH

Date
Revision
Project ID
Drawing Code
CAD File Name: Guertler ADU.vwx
Plot Date

STATE OF UTAH
MENTON K. PETERS JR.
No. 14
LICENSED ARCHITECT

KP2 ARCHITECTS
1234 S 900 E
SALT LAKE CITY, UT 84105
801-541-8593
KP2@KP2ARCHITECTS.COM

All Rights Reserved
Copyright © 2022 KP2 P.C. - MENTON K. PETERS JR. - ARCHITECT
This drawing is the property of the architect and is protected by copyright under the 1976 copyright act. It is an exclusive work of original authorship. Unauthorized use of this drawing or any part thereof is prohibited. No part of this sheet may be reproduced by any method, nor may they be used or transmitted in any form or by any means, electronic or mechanical, without the express written permission of the architect.

Project Title: Geurtler ADU
Sheet Title: Floor plans & Schedules
Scale
Jul 24, 2025
Sheet No.
A-101
of
10

Reviewed by Planning Department

Rachel Coleman, Planning Technician
10/02/2025 5:36:10 PM

AVERAGE FINISHED GRADE ELEVATION

HEIGHT ABOVE TOP OF ADU MAIN LEVEL FLOOR SLAB

SOUTH = 30"
WEST = 18"
NORTH = 19.5"
EAST = 35.25"
TOTAL = 94.75"

DIVIDED BY 4 FACADES = 23.6875"

CONVERTED TO FEET
AVERAGE FINISHED GRADE HEIGHT ABOVE TOP OF MAIN LEVEL FLOOR SLAB = 1'-11 5/8"

INDICATED ON ELEVATIONS BY THIS LINE:

Eves are 1 foot.

-Meets Sidewall Height requirement at 14'10".

-Meets Overall Height requirement at 17.5 feet.

See Section 14-4-105.J.2.b.i of Bountiful City Land Use Code

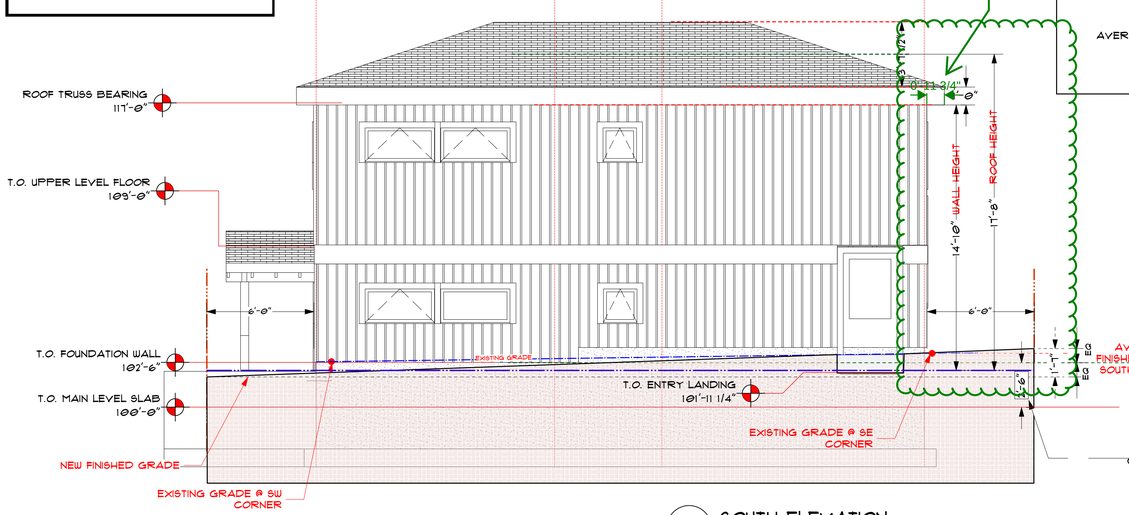

1 SOUTH ELEVATION
SCALE: 1/4" = 1'-0"

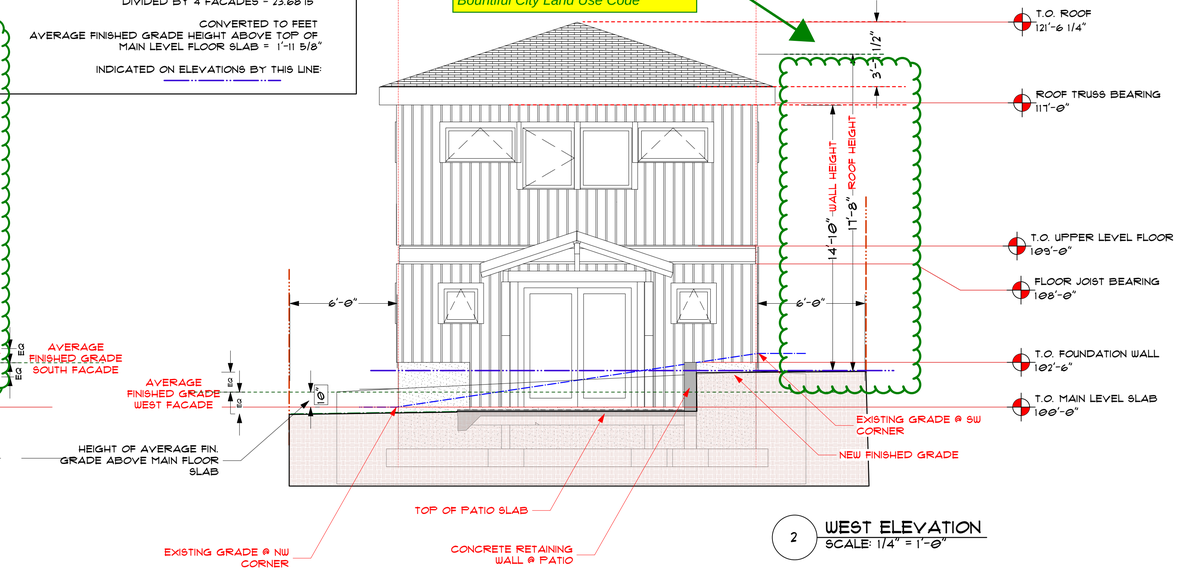

2 WEST ELEVATION
SCALE: 1/4" = 1'-0"

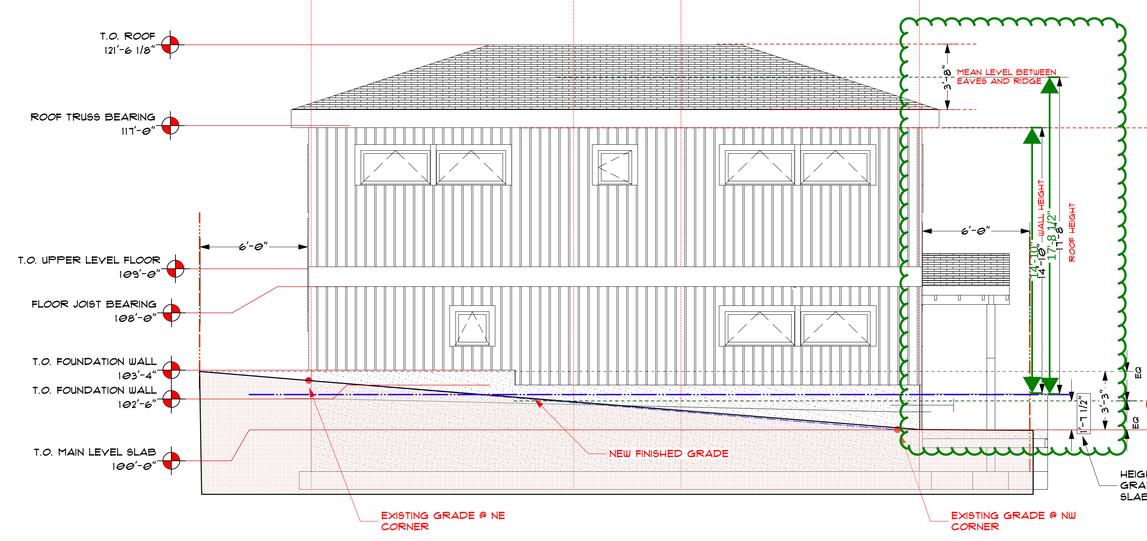

3 NORTH ELEVATION
SCALE: 1/4" = 1'-0"

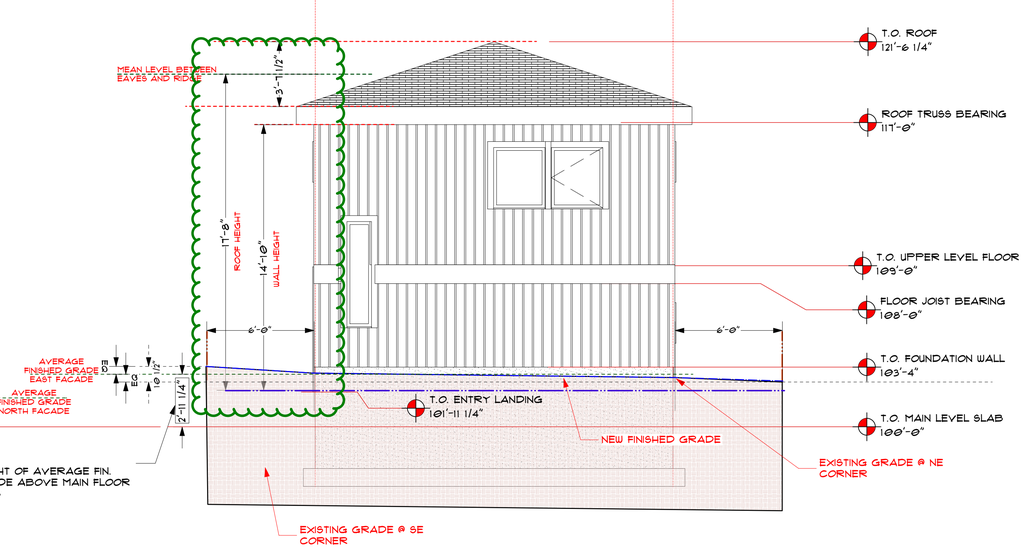

4 EAST ELEVATION
SCALE: 1/4" = 1'-0"

kp2 architects
1234 s. 900 e.
slc, ut 84105
801-541-8593
kp2@kp2architects.com

GEURTLER ADU
685 E. 1825 S.
BOUNTIFUL, UTAH

Date
Revision
Project ID
Drawing Code
CAD File Name: Guertler ADU.vwx
Plot Date

STATE OF UTAH KENTON K. PETERS JR. No. 14 ARCHITECT

KP2 ARCHITECTS
1234 S 900 E
SALT LAKE CITY, UT 84105
801-541-8593
KP2@KP2ARCHITECTS.COM

All Rights Reserved
Copyright © 2022 KP2 P.C. - KENTON K. PETERS JR. - ARCHITECT
The architectural work shown on this drawing is protected by copyright under the 1976 copyright act. It is an exclusive work of original authorship. Reproduction or publication by any method, in whole or in part, without this sheet may be reproduced by any method, nor may they be used or disclosed to any other persons or entities without the written permission of the architect.

Project Title: Geurtler ADU
Sheet Title: Exterior Elevations
Scale
Jul 24, 2025
Sheet No.
A-201
of
10

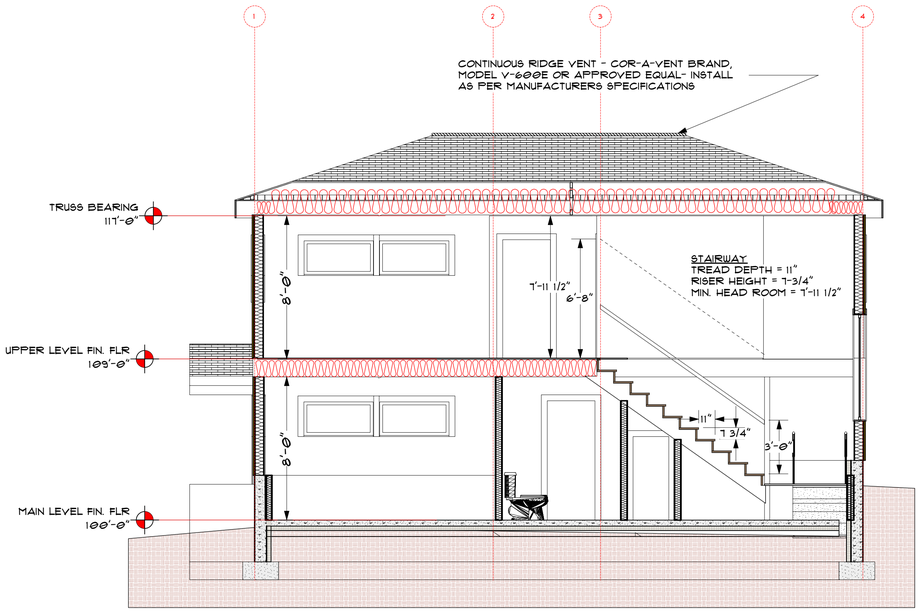

6 EAST/WEST BUILDING SECTION
SCALE: 1/4" = 1'-0"

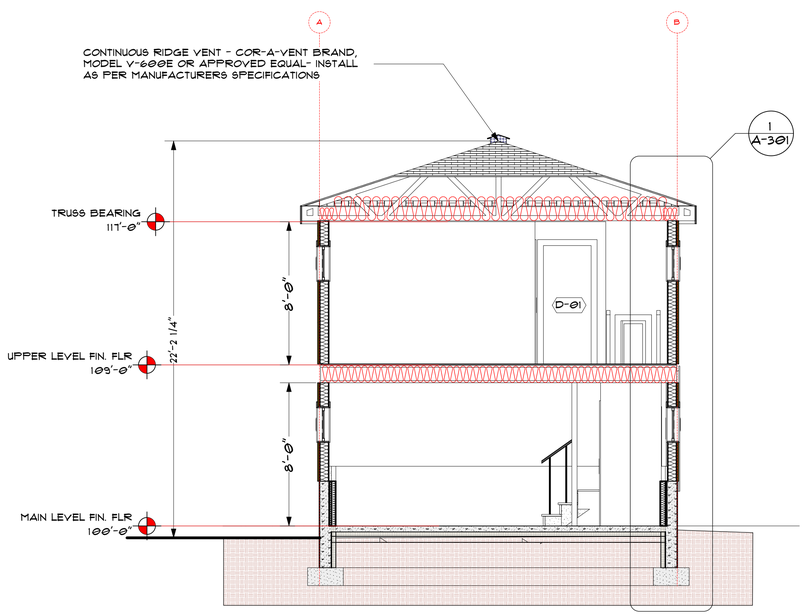

5 N/S BUILDING SECTION
SCALE: 1/4" = 1'-0"

Reviewed by Planning Department

Rachel Coleman, Planning Technician
10/02/2025 5:36:27 PM

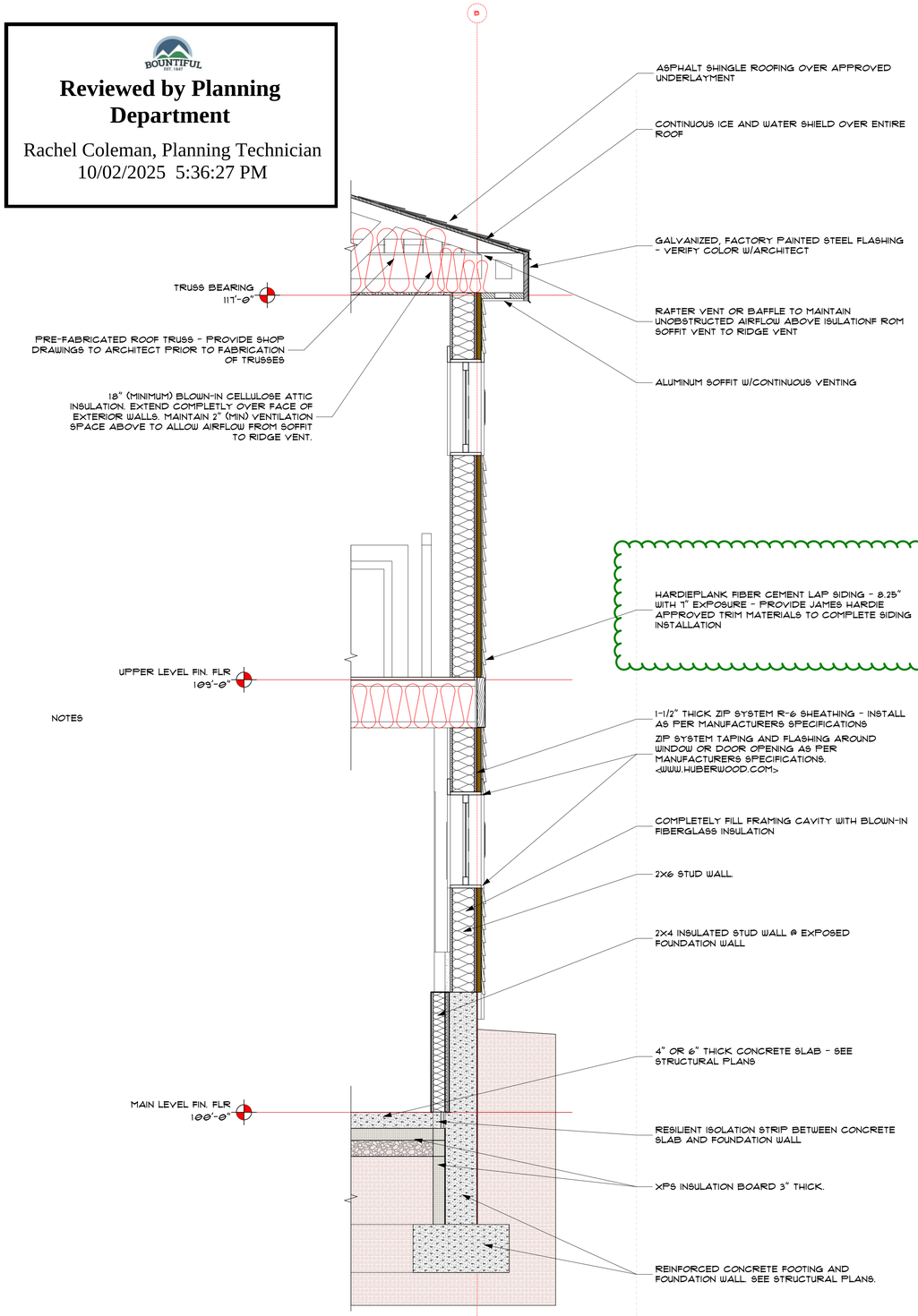

Material being used on exterior walls of home

1 WALL SECTION
SCALE: 3/4" = 1'-0"

Jul 24, 2025

kp2 architects
1234 s. 900 e.
slc, ut 84105
801-541-8593
kp2@kp2architects.com

GEURTLER ADU
685 E. 1825 S.
BOUNTIFUL, UTAH

Date	
Revision	
Project ID	
Drawing Code	
CAD File Name	Guertler ADU.vwx
Plot Date	

STATE OF UTAH KENTON X. PETERS JR. NO. 14/8 LICENSED ARCHITECT

KP2 ARCHITECTS
1234 S 900 E
SALT LAKE CITY, UT 84105
801-541-8593
KP2@KP2ARCHITECTS.COM

All Rights Reserved
Copyright © 2022, KP2 PC - KENTON A. PETERS JR. - ARCHITECT
"The Instruments of Service" as defined in AIA Document B101-2007 are protected under the 1976 copyright act. It is an exclusive work of original authorship. Without the express written permission and consent of the author, no part of this sheet may be reproduced by any method, nor may they be used on any other project, for any purpose, or be delivered to anyone other than the owner of the project or the architect.

Project Title: Geurtler ADU

Sheet Title: Building Sections & Wall Section

Scale: Jul 24, 2025

Sheet No. A-301 of 10

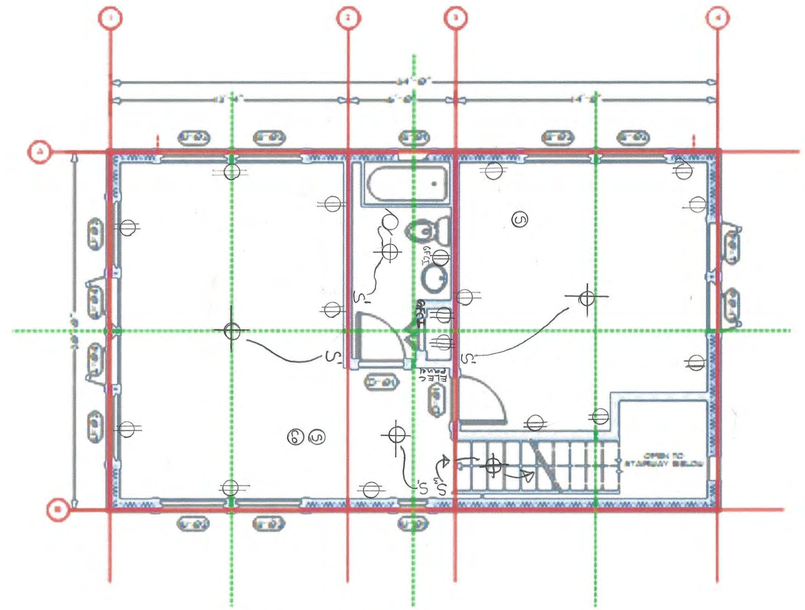

1 UPPER LEVEL ELECTRICAL LAYOUT
SCALE: 1/4" = 1'-0"

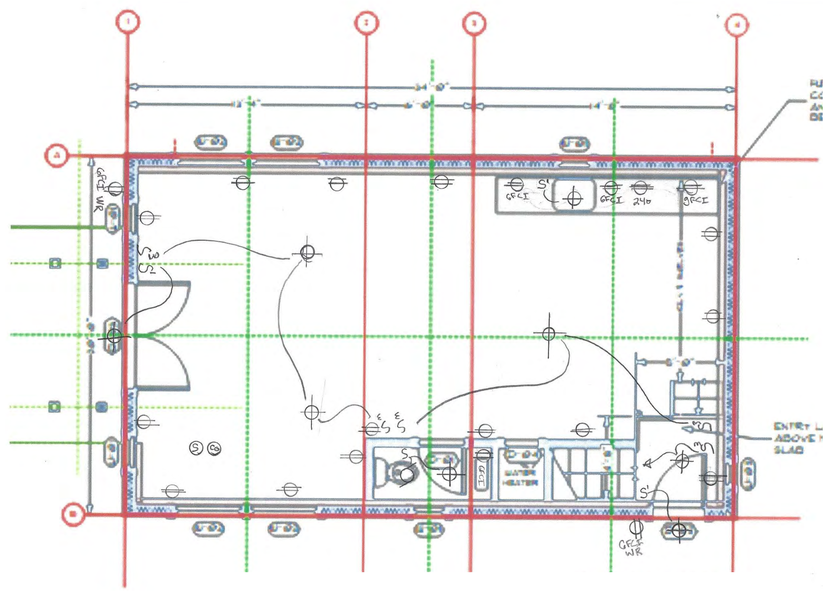

2 MAIN LEVEL ELECTRICAL LAYOUT
SCALE: 1/4" = 1'-0"

Jul 24, 2025

kp2 architects
1234 s. 900 e.
slc, ut 84105
801-541-8593
kp2@kp2architects.com

GEURTLER ADU
685 E. 1825 S.
BOUNTIFUL, UTAH

Date	
Revision	
Project ID	
Drawing Code	
CAD File Name	Guertler ADU.vwx
Plot Date	

STATE OF UTAH KENTONA R. PETERS JR. NO. 14 LICENSED ARCHITECT

KP2 ARCHITECTS
1234 S 900 E
SALT LAKE CITY, UT 84105
801-541-8593
KP2@KP2ARCHITECTS.COM

All Rights Reserved
Copyright © 2022, KP2 P.C. - KENTONA PETERS JR. - ARCHITECT
"This drawing is an instrument of service and is the property of the architect and is protected under the 1976 copyright act. It is an exclusive work of original authorship. Without written permission from the architect, no part of this drawing or any part of this sheet may be reproduced by any method, nor may they be used or transferred to any other project or for any purpose other than specified in the contract with the architect."

Project Title: Geurtler ADU

Sheet Title: Electrical Plans

Scale: Jul 24, 2025

Sheet No.: E-101 of 10

GENERAL STRUCTURAL NOTES:

I. GENERAL:

A. THE STRUCTURAL DRAWINGS SHOW THE COMPLETED PROJECT. DETAILS, SECTIONS, AND NOTES SHOWN ON THE DRAWINGS SHALL BE TYPICAL AND APPLY TO SIMILAR SITUATIONS ELSEWHERE UNLESS NOTED OR SHOWN OTHERWISE.

B. CONTRACTOR SHALL COMPARE ALL DIMENSIONS AND CONDITIONS ON CONTRACT DOCUMENTS AND AT THE SITE. ANY OMISSION OR CONFLICT SHALL BE BROUGHT TO THE ATTENTION OF THE ARCHITECT/ENGINEER. IN CASE OF ANY CONFLICT FOLLOW THE MOST STRINGENT REQUIREMENT AS DIRECTED BY ARCHITECT/ENGINEER.

C. SEE THE ARCHITECTURAL DRAWINGS FOR DOORS, WINDOWS, NON-BEARING INTERIOR AND EXTERIOR WALLS, RECESSES, DEPRESSIONS, ETC.

D. CONTRACTOR SHALL PROVIDE ADEQUATE TEMPORARY BRACING FOR ALL PORTIONS OF THE BUILDING UNTIL THE ENTIRE STRUCTURE OF THE BUILDING IS COMPLETE.

E. OBSERVATION VISITS TO THE SITE BY STRUCTURAL ENGINEER'S FIELD REPRESENTATIVES SHALL NOT BE CONSTRUED AS INSPECTION OR APPROVAL OF CONSTRUCTION.

F. ANY ENGINEERING DESIGN PROVIDED BY OTHERS AND SUBMITTED FOR REVIEW SHALL BEAR THE SEAL AND SIGNATURE OF A STRUCTURAL ENGINEER REGISTERED IN UTAH.

II. DESIGN CRITERIA:

A. BUILDING CODE: 2021 INTERNATIONAL BUILDING CODE (IBC) W/ AMENDMENTS

B. LOADINGS:

1. ROOF SNOW LOAD = 35 PSF + SNOW DRIFT PER IBC
2. FLOOR DEAD/LIVE LOAD = 20/40 PSF
3. WIND LOAD - 115 MPH ZONE - EXPOSURE C, I=1
4. SEISMIC DESIGN DATA: SDC-D2, Ss=1.49,S1=0.53,I=1,R=6.5, Fa=1.08, WOOD SHEAR WALL SYSTEM, V=0.178W, Ir=1.25, SITE CLASS: D,EQUIVALENT LATERAL FORCE PROCEDURE

C. FOUNDATION:

1. ALL EXTERIOR FOOTINGS ARE TO BE FOUNDED AT NOT LESS THAN 30" BELOW LOWEST ADJACENT FINISH FLOOR OR FINISH GRADE ONTO UNDISTURBED EXISTING SUBSOILS HAVING A MINIMUM NET BEARING CAPACITY OF 1500 PSF. ALL INTERIOR FOOTINGS ARE TO BE FOUNDED AT NOT LESS THAN 1'-3" BELOW LOWEST ADJACENT FINISH FLOOR ONTO SUBSOILS.

III. CONCRETE:

A. ALL MATERIALS SHALL COMPLY WITH ACI 318 AND ACI 347 PUBLICATIONS AND APPLICABLE ASTM PUBLICATIONS.

B. CONCRETE MATERIAL PROPERTIES: 28-DAY COMPRESSIVE STRENGTHS ARE TO BE 3000 PSI TYPICAL UNLESS NOTED OTHERWISE. DESIGN BASED ON 2500 PSI.

C. CAST IN PLACE CONCRETE:

1. SPACING OF CONSTRUCTION JOINTS OR CONTROL JOINTS IN WALLS EXPOSED TO VIEW SHALL NOT EXCEED 40 FEET UNLESS SPECIFICALLY NOTED OTHERWISE ON THE DRAWINGS.
2. PROVIDE EXTRA REINFORCING AROUND ALL OPENINGS EXCEEDING 24 INCHES SQUARE OR ROUND IN ALL SLABS AND WALLS EQUAL TO TWO #5 BARS ON FOUR SIDES AND EXTEND TWO FEET BEYOND THE OPENING.
3. PROVIDE A 3/4" CHAMFER ON ALL EXPOSED CORNERS OF CONCRETE UNLESS NOTED OTHERWISE.
4. PROVIDE CLASS B LAP SPLICES FOR ALL REINFORCING UNLESS NOTED OTHERWISE.
5. PROVIDE ISOLATION JOINTS AROUND ALL COLUMNS AT ALL EXPOSED SLAB ON GRADE AREAS.

IV. REINFORCING STEEL:

A. ALL BARS #4 AND LARGER TO BE ASTM A 615, GRADE 60. ALL #2 AND #3 BARS TO BE ASTM A 615, GRADE 40. DETAILED, FABRICATED AND ERECTED IN ACCORDANCE WITH ACI-318, LATEST ADOPTION.

B. ALL REINFORCING STEEL SHALL BE BENT, DETAILED AND CHAIRED AS PER "ACI MANUAL OF STANDARD PRACTICE FOR DETAILING REINFORCING CONCRETE STRUCTURES".

C. WELDED WIRE FABRIC TO BE IN ACCORDANCE WITH ASTM A 185.

D. ALL BARS INDICATED ON THE PLANS TO BE WELDED SHALL CONFORM TO ASTM A706 (GRADE 60).

E. CONCRETE COVER REQUIREMENTS FOR DEFORMED BAR REINFORCING STEEL SHALL COMPLY WITH ACI 318, "BUILDING CODE REQUIREMENTS FOR REINFORCING CONCRETE".

1. CAST-IN-PLACE CONCRETE:

a) CONCRETE CAST AGAINST AND PERMANENTLY EXPOSED TO EARTH: 3"

b) FORMED CONCRETE EXPOSED TO EARTH OR WEATHER:

#6 BARS AND LARGER: 2"
#5 BARS AND SMALLER: 1-1/2"

c) CONCRETE NOT EXPOSED TO WEATHER OR IN CONTACT WITH GROUND:
SLABS, WALLS JOISTS: #11 BARS OR SMALLER: 3/4"
BEAMS, COLUMNS: PRIMARY REINFORCING, TIES, STIRRUPS, SPIRALS: 1-1/2"

F. DETAILING: SUBMIT PLACING DRAWINGS PER ACI DETAILING MANUAL, ACI SP-66. FABRICATE ONLY AFTER REVIEW AND APPROVAL. REINFORCING BARS SHALL NOT BE WELDED UNLESS SPECIFICALLY SHOWN ON DRAWINGS.

1. LAP SPLICE LENGTHS SHALL BE AS FOLLOWS:
30 BAR DIAMETER FOR #3 AND #4 BARS
40 BAR DIAMETER FOR #5 THROUGH #8 BARS
DO NOT SPLICE STIRRUPS AND TIES
DO NOT SPLICE VERTICAL BARS IN RETAINING WALLS UNLESS SPECIFICALLY SHOWN.

2. ALL EMBEDMENTS AND DOWELS SHALL BE SECURELY TIED TO FORMWORK OR TO ADJACENT REINFORCING PRIOR TO THE PLACEMENT OF CONCRETE.

V. STRUCTURAL AND MISCELLANEOUS STEEL:

A. MATERIAL PROPERTIES:

1. ALL SHAPES, PLATES, ANGLES, AND CHANNELS TO BE ASTM A-36 UNLESS NOTED OTHERWISE.
2. ALL WF SHAPES WEIGHING 84 POUNDS PER LINEAR FOOT OR LESS TO BE ASTM A 572, GRADE 50. ALL WF SHAPES WEIGHING MORE THAN 84 POUNDS PER LINEAR FOOT TO BE ASTM A 572, GRADE 36.
3. SQUARE OR RECTANGULAR TUBES TO BE ASTM A 500, GRADE B, Fy = 46 KSI.
4. ALL STEEL TO BE DETAILED, FABRICATED AND ERECTED IN ACCORDANCE WITH A.I.S.C. SPECIFICATIONS, LATEST ADOPTION.

B. WELDING:

1. FOR STRUCTURAL STEEL TO BE IN ACCORDANCE WITH A.W.S. REQUIREMENTS FOR E70XX ELECTRODES.

C. BOLTS:

1. ALL BOLTS TO BE 3/4" DIAMETER ASTM A 325-N UNLESS NOTED OTHERWISE.
2. BOLTS, NUTS AND WASHERS SHALL NOT BE REUSED.
3. ANCHOR BOLTS SHALL BE ASTM A 307 OR A 36.
4. EXPANSION BOLTS ARE 3/4" DIAMETER RAMSET "DYNABOLTS" INSTALLED IN ACCORDANCE WITH ICBO #1372. MINIMUM EMBEDMENT TO BE 3 1/2" IN CONCRETE AND 5" IN SOLID GROUTED MASONRY. ALL CONCRETE OR MASONRY SHALL BE AT ITS SPECIFIED DESIGN STRENGTH AT THE TIME OF INSTALLATION.

VI. WOOD:

A. DIMENSIONAL LUMBER: ALL TO BE GRADE STAMPED PER W.C.L.B. RULES.

1. ALL JOISTS, BEAMS, PLATES, HEADERS AND OTHER LUMBER TO BE D.FIR/LARCH #2 UNLESS OTHERWISE NOTED.
2. 2 X 4 SUB-PURLINS TO BE D.FIR/LARCH NO.1.
3. 2X 6 SUB-PURLINS TO BE D.FIR/LARCH NO.1.
4. PURLINS TO BE D.FIR DENSE #1.
5. 4X AND 6X POSTS TO BE D.FIR/LARCH NO.1.
6. WALL STUDS TO BE D.FIR/LARCH #2 GRADE OR BETTER.

B. WOOD DECKING: FLOOR DECKING SHALL BE COMMERCIAL 2 X 6 (NOMINAL TONGUE AND GROOVE DECKING, HEM-FIR OR BETTER WITH A REPETITIVE Fb OF 1450 PSI MINIMUM.

C. GLU-LAMS:

1. TO BE GRADE STAMPED PER A.I.T.C., D.FIR/LARCH COMBINATION 24F-V8 FOR CONTINUOUS SPANS AND D.FIR/LARCH COMBINATION 24F-V4 FOR SIMPLE SPANS. GLUED WITH WATERPROOF GLUE.

D. PLYWOOD:

1. ROOF SHEATHING TO BE STD 5/8" C-D OR OSB WITH EXTERIOR GLUE, IDENTIFICATION INDEX 32/16. NAIL WITH 8d NAILS AT 6" O.C. AT ALL EDGE SUPPORTS AND WITH 8d NAILS AT 12" O.C. AT ALL INTERMEDIATE SUPPORTS UNLESS NOTED OTHERWISE.
2. FLOOR SHEATHING TO BE STD 3/4" OSB OR C-C T&G WITH EXTERIOR GLUE, IDENTIFICATION INDEX 40/20. NAIL WITH 8d NAILS AT 6" O.C. AT ALL EDGE SUPPORTS AND WITH 8d NAILS AT 12" O.C. AT ALL INTERMEDIATE SUPPORTS UNLESS NOTED OTHERWISE.
3. EXTERIOR WALLS TO BE STD 7/16" OSB OR C-C WITH EXTERIOR GLUE. NAIL WITH 8d NAILS AT 6" O.C. AT ALL EDGE SUPPORTS AND WITH 8d NAILS AT 12" O.C. AT ALL INTERMEDIATE SUPPORTS UNLESS NOTED OTHERWISE. SEE SHEAR WALL SCHEDULE FOR SHEAR WALL SHEATHING AND NAILING.

E. PLYWOOD WEB I JOISTS:

1. TO BE DESIGNED, DETAILED AND FABRICATED BY TRUS-JOIST AND HAVE THE APPROVAL OF ICBO.
2. JOISTS ARE TO BE DESIGNED FOR THE LIVE LOADS LISTED ABOVE AND FOR A SUPERIMPOSED DEAD LOAD OF NOT LESS THAN 15 PSF.
3. DESIGN JOISTS FOR TWICE THE WEIGHT OF MECHANICAL UNITS INDICATED ON THE PLANS IN ACCORDANCE WITH AMERICAN INSTITUTE OF TIMBER CONSTRUCTION TECHNICAL NOTE #9. REVIEW ARCHITECTURAL AND MECHANICAL DRAWINGS FOR ADDITIONAL UNITS REQUIRED.

F. SPECIAL TREATMENTS (AMERICAN WOOD PRESERVERS INSTITUTE STANDARDS):

1. ALL WOOD IN CONTACT WITH CONCRETE, MASONRY OR SOIL: PRESSURE TREAT WITH WOLMAN CCA PRESERVATIVE OR EQUAL AS APPROVED BY THE ARCHITECT.
2. FIRE RETARDANT: PRESSURE TREAT WITH DRICON OR EQUAL AS APPROVED THE ARCHITECT.

G. WOOD NAILING SCHEDULE:

1. JOIST TO SILL OR GIRDER, TOENAIL 3-8d
2. BRIDGING TO JOIST, TOENAIL EACH END 2-8d
3. 1"X6" SUBFLOOR OR LESS TO EACH JOIST FACE NAIL 2-8d
4. WIDER THAN 1"X6" SUBFLOOR TO EACH JOIST, FACE NAIL 3-8d
5. SUBFLOOR TO JOIST OR GIRDER, BLIND AND FACE NAIL 2-16d
6. SOLE PLATE TO JOIST OR BLOCKING, FACE NAIL 2-16d
7. TOP PLATE TO STUD, END NAIL 2-16d
8. STUD TO SOLE PLATE TOENAIL 4-8d OR FACE NAIL 2-16d
9. DOUBLE STUDS, FACE NAIL 16d @ 24" o.c.
10. DOUBLED TOP PLATES, FACE NAIL 16d @ 16" O.C.
11. TOP PLATES, LAPS AND INTERSECTIONS, FACE NAIL 2-16d
12. CONTINUOUS HEADER, 2 PIECES 16d @ 16"O.C. ALONG 2 EDGES
13. CEILING JOISTS TO PLATE, TOENAIL 3-8d
14. CONTINUOUS HEADER TO STUD, TOENAIL 4-8d
15. CEILING JOIST, LAPS OVER PARTITIONS FACE NAIL 3-16d
16. CEILING JOIST TO PARALLEL RAFTERS FACE NAIL 3-16d
17. RAFTER TO PLATE, TOENAIL 4-8d

NAIL 3-8d

21. BUILT UP CORNER STUDS 16d @ 24" O.C.
22. BUILT-UP GIRDERS AND BEAMS 20d @ 32"O.C. AT TOP AND BOTTOM AND STAGGERED 2-20d AT EACH END & SPLICE
23. PLANKS 2-16d AT EACH BEARING

VII. MISCELLANEOUS:

A. GYPSUM WALLBOARD: FOR SHEAR WALLS TO BE STANDARD 1/2" GYPSUM WALLBOARD. NAIL WITH 5D COOLER NAILS AT 7" O.C. TO ALL STUDS, TOP AND BOTTOM PLATES AND BLOCKING.

B. STUCCO: FOR SHEAR WALLS TO BE STANDARD 7/8" PORTLAND CEMENT PLASTER ON EXPANDED METAL OR WOVEN WIRE LATH. NAIL WITH NO.11 GAGE, 1 1/2" LONG, 7/16" HEAD NAILS OR NO.16 GAGE STAPLES WITH 7/8" LONG LEGS AT 6" O.C. TO ALL STUDS, TOP AND BOTTOM PLATES AND BLOCKING.

VIII. SPECIAL INSPECTION: SPECIAL INSPECTION IS REQUIRED IN ACCORDANCE WITH IBC SECTION 1704.

A. EPOXY BOLTS IN TENSION IF APPLY.
B. FIELD WELDING IF APPLY.

X. PREFABRICATED WOOD TRUSSES:

1. TO BE "GANG-NAIL" OR "ALPINE" OR APPROVED EQUAL DESIGNED, DETAILED AND FABRICATED IN ACCORDANCE WITH THE NATIONAL FOREST PRODUCTS ASSOCIATION "NATIONAL DESIGN SPECIFICATION FOR STRESS GRADE LUMBER AND ITS FASTENING" AND THE TRUSS PLATE INSTITUTE "DESIGN SPECIFICATION FOR METAL PLATE CONNECTED WOOD TRUSSES", LATEST ADOPTION.

2. LOADING:

a) TRUSS TOP CHORDS ARE TO BE DESIGNED FOR THE LIVE LOADS LISTED ABOVE AND FOR A SUPERIMPOSED DEAD LOAD OF NOT LESS THAN 15 PSF.

b) TRUSS BOTTOM CHORDS ARE TO BE DESIGNED FOR A SUPERIMPOSED DEAD LOAD OF NOT LESS THAN 5 PSF.

c) DESIGN TRUSSES FOR TWICE THE WEIGHT OF MECHANICAL UNITS INDICATED ON THE PLANS IN ACCORDANCE WITH AMERICAN INSTITUTE OF TIMBER CONSTRUCTION TECHNICAL NOTE #9. REVIEW ARCHITECTURAL AND MECHANICAL DRAWINGS FOR ADDITIONAL UNITS REQUIRED.

d) FOR TRUSSES MANUFACTURED SUCH THAT ALL CHORDS ARE MSR LUMBER AND ALL CHORD SPLICES ARE FINGER JOINTS AND PROOF LOADED IN ACCORDANCE WITH U.B.C STANDARDS, THE ALLOWABLE STRESS INCREASE FOR DURATION OF LOAD MAY BE THE MAXIMUM PERMITTED BY THE NATIONAL FOREST PRODUCTS ASSOCIATION "NATIONAL DESIGN SPECIFICATION FOR STRESS GRADE LUMBER AND ITS FASTENING", LATEST ADOPTION.

3. SUBMITTALS:

a) COMPLETE DESIGN CALCULATIONS SHALL BE FURNISHED TO THE ENGINEER FOR EACH TRUSS. CALCULATIONS MUST BE PREPARED AND SEALED BY AN ENGINEER REGISTERED IN THE STATE OF UTAH.

b) SHOP DRAWINGS SHALL BE SUBMITTED TO THE ARCHITECT FOR REVIEW BY THE ENGINEER PRIOR TO FABRICATION.

c) THE TRUSS MANUFACTURER SHALL PROVIDE WRITTEN CERTIFICATION THAT THE TRUSS QUALITY IS IN CONFORMANCE TO "QUALITY STANDARD FOR METAL PLATE CONNECTED WOOD TRUSSES", LATEST ADOPTION, PUBLISHED BY THE TRUSS PLATE INSTITUTE.

d) THE TRUSS MANUFACTURER SHALL HAVE A QUALITY ASSURANCE PROGRAM IN ACCORDANCE WITH SECTION 25-1739 OF IBC STANDARD NO. 25-17 AND PROVIDE WRITTEN CERTIFICATION OF COMPLIANCE FROM THE INDEPENDENT TESTING AGENCY.

4. GENERAL:

a) ALL TRUSSES AND RELATED BRACING SHALL BE SIZED AND DETAILED TO FIT THE DIMENSIONS AND LOADS INDICATED ON THE PLANS.

b) LUMBER USED FOR CHORDS AND WEBS SHALL HAVE A MAXIMUM MOISTURE CONTENT BELOW 19% AT THE TIME OF FABRICATION.

c) ALL TRUSS MEMBERS SHALL MEET OR EXCEED VISUAL REQUIREMENTS FOR NO. 2 GRADE. NO WANE SHALL BE PERMITTED IN THE CONNECTION AREA.

d) DESIGN LATERAL RESISTANCE VALUES FOR TRUSS PLATES AND METAL WEBS SHALL BE 80% OF ICBO ALLOWABLE LOAD VALUES.

e) THE HANKINSON FORMULA OR STRAIGHT LINE INTERPOLATION SHALL BE USED TO DETERMINE LATERAL RESISTANCE VALUES FOR PLATE TO WOOD GRAIN ANGLES BETWEEN 0 AND 90 DEGREES.

f) AT CHORD SPLICE LOCATIONS, MAXIMUM TENSION FORCES SHALL BE AS FOLLOWS:

PLATE GAGE	2X4	2X6
20	3500 #	5000 #
18	4800 #	7000 #
16	6000 #	9000 #

g) THE AXIAL FORCE FOR A 2X4 WEB SHALL NOT EXCEED 3500 LBS.

h) TRUSS PLATES SHALL BE SIZED SO THAT THEY CAN BE CENTERED BOTH HORIZONTALLY AND VERTICALLY ON THE JOINT UNLESS THE CHORD DEPTH OR THE TRUSS GEOMETRY PROHIBITS SUCH PLACEMENT.

i) EVERY TRUSS PLATE SHALL BE FULLY EMBEDDED INTO THE UNDERLYING WOOD ACROSS THE ENTIRE CONTACT AREA.

j) ALL TRUSSES SHALL BE INSTALLED IN ACCORDANCE WITH THE LATEST EDITION OF "HANDLING AND ERECTING WOOD TRUSSES: COMMENTARY AND RECOMMENDATIONS", PUBLISHED BY THE TRUSS PLATE INSTITUTE. TEMPORARY BRACING SHALL BE INSTALLED DURING ERECTION AS REQUIRED BY THE LATEST EDITION OF "BRACING WOOD TRUSSES: COMMENTARY AND RECOMMENDATIONS", PUBLISHED BY THE TRUSS PLATE INSTITUTE.

HOLDOWN ALTERNATES w/ SIMPSON "SET-XP" - ESR2508					
HOLDOWNS CALLED OUT ON PLAN	SIMPSON HOLDOWNS	NEW ANCHORS SIMPSON "SET-XP"	d1*	d2*	d2 @ CORNER
HDN5	HDU2	5/8"ϕ	6"	6"	10"
HDN6	HDU5	5/8"ϕ	6"	8"	14"
HDN7	HDU8	7/8"ϕ	8"	14"	
HDN8	HDU11	1"ϕ	8"	16"	
HDN9	HDU14	1"ϕ	12"	20"	

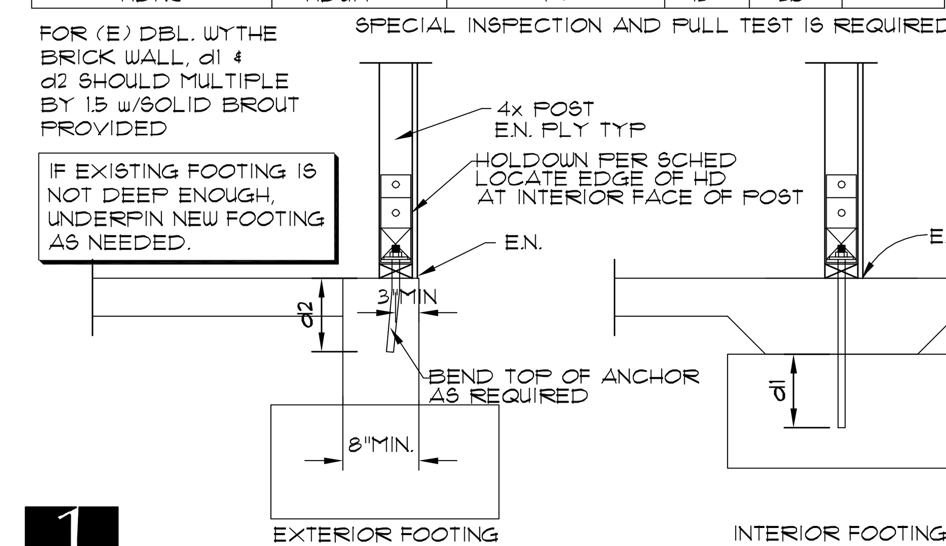

1 HOLDOWN INSTALLATION WITH EPOXY BOLTS

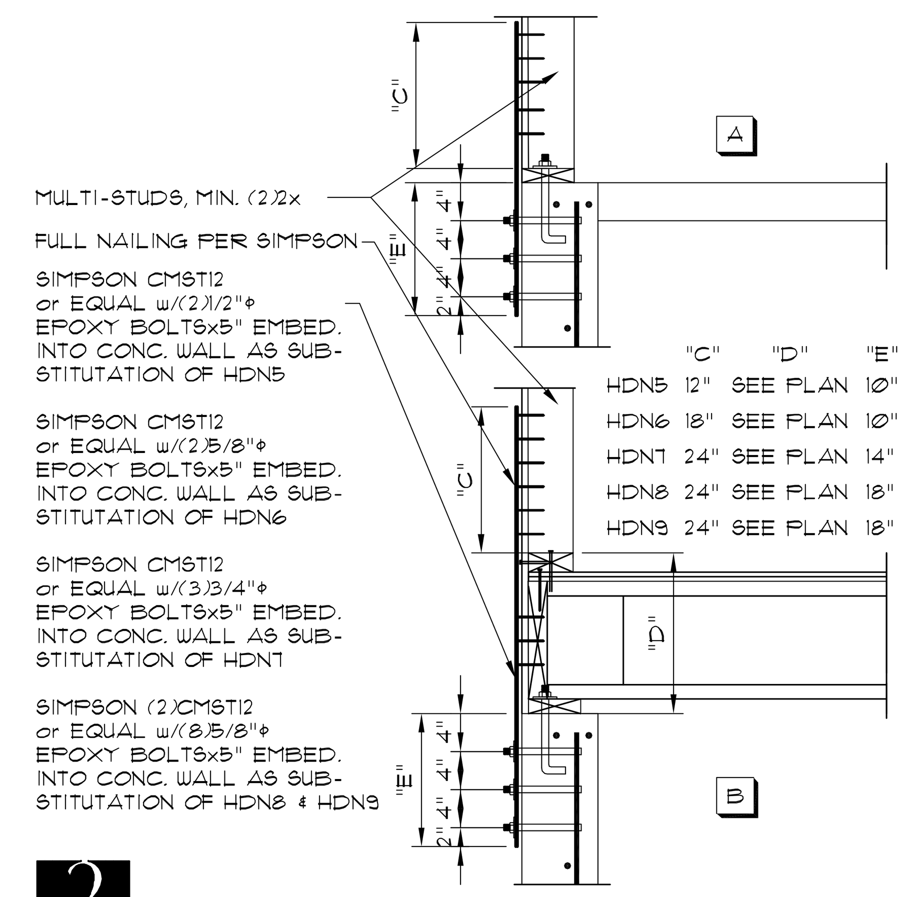

2 HOLDOWN INSTALLATION WITH EPOXY BOLTS

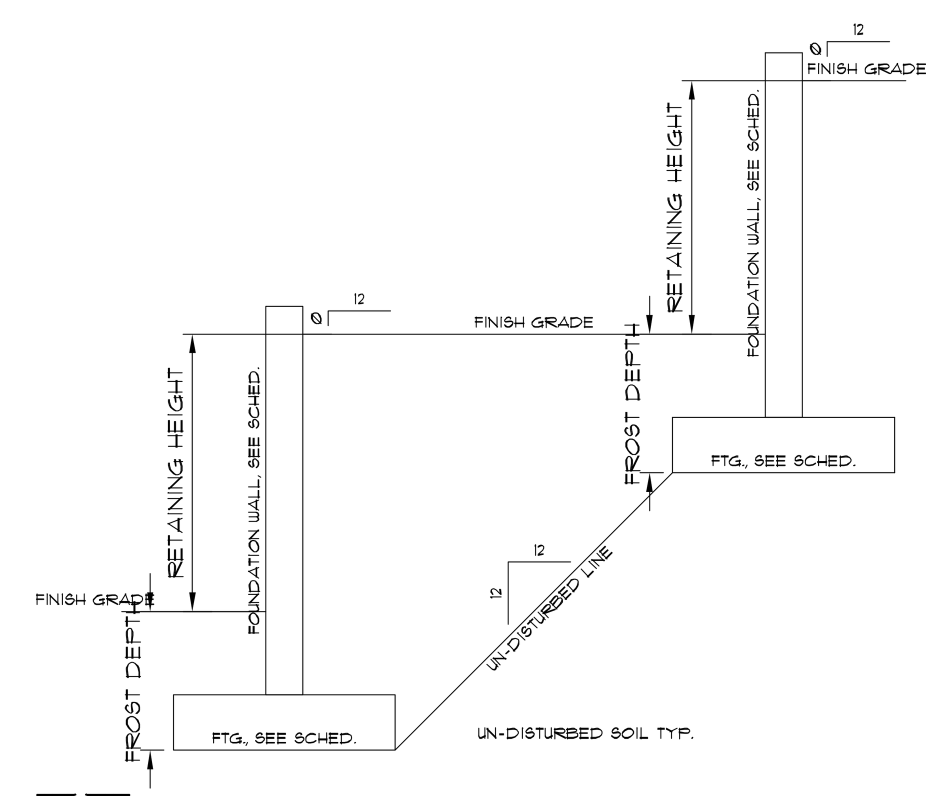

3 RETAINING WALL EXCAVATION GUIDELINE

LICENSED PROFESSIONAL ENGINEER No. 260129 HUA SHEN EXP. 3/31/27 STATE OF UTAH
5/28/2025

GEURTLER ADU
685 EAST 1825 SOUTH
BOUNTIFUL, UTAH

No. | Date | Issue Notes

Project ID SE25086
Scale
Drawing No.
Project Manager
Drawn By
Reviewed By
Date
CAD File Name

Design Firm: KP2 ARCHITECTS, 1234 S. 900 E., SALT LAKE CITY, UTAH 84105
Consultant: Shen Engineers, Inc. Structural/Seismic Consultants, 4157 s. fortuna way, millcreek, ut 84124

Project Title: GEURTLER ADU, 685 EAST 1825 SOUTH, BOUNTIFUL, UTAH
Sheet Title
Scale
Sheet No.
S1.1

AutoCAD Version: 13_c4
April 08, 1996 3:28:37 p.m.
Drawing: C:\R13\COM\PROTOS\D12.DWG (RJG)

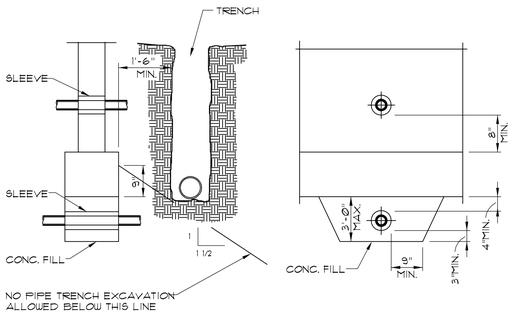

NOTE: CONCRETE FILL TO BE THE SAME WIDTH AS FOOTING & FULL WIDTH OF PIPE TRENCH. PIPE TO CLEAR SLEEVE BY 1/2" ALL AROUND

10 PIPES AT CONCRETE FOOTING

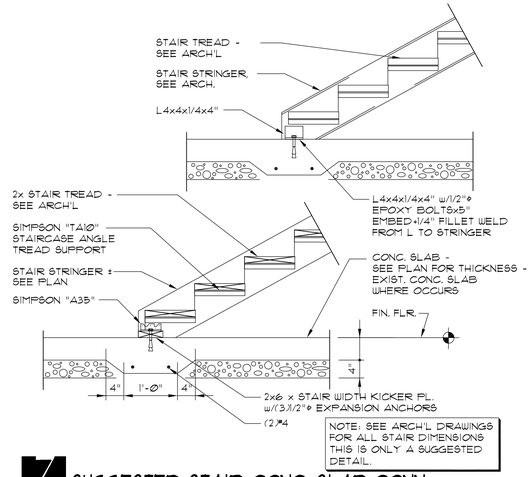

NOTE: SEE ARCH'L DRAWINGS FOR ALL STAIR DIMENSIONS THIS IS ONLY A SUGGESTED DETAIL.

7 SUGGESTED STAIR-CONC. SLAB CONN.

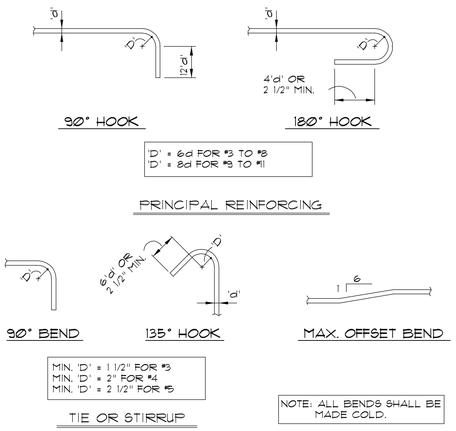

NOTE: ALL BENDS SHALL BE MADE COLD.

4 TYPICAL REINFORCING BAR BENDS

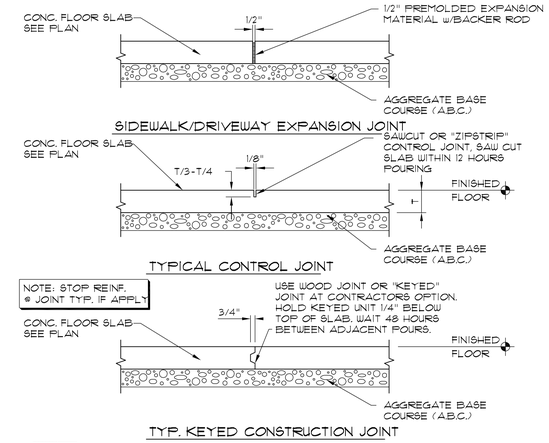

1 TYPICAL CONCRETE FLOOR JOINTS

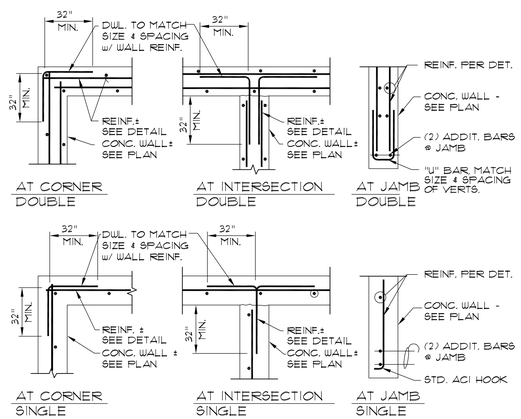

8 TYPICAL CONC. WALL REINF.

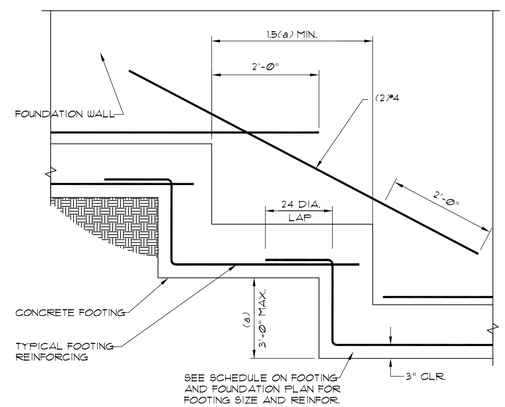

NOTE: REINFORCING MAY BE CONTINUOUS

5 TYPICAL STEPPED FOOTING

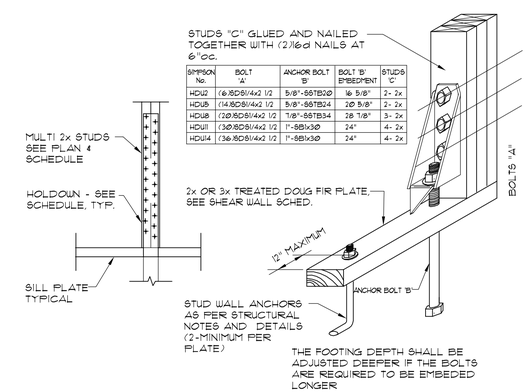

SIMPSON No.	BOLT 'A'	ANCHOR BOLT 'B'	BOLT 'B' EMBEDMENT	STUDS 'C'
HDU2	(6)16D5(1/4x2 1/2	5/8"-55TB20	16 5/8"	2- 2x
HDU5	(14)16D5(1/4x2 1/2	5/8"-55TB24	20 5/8"	2- 2x
HDU8	(20)16D5(1/4x2 1/2	7/8"-55TB34	28 7/8"	3- 2x
HDU11	(30)16D5(1/4x2 1/2	1"-55TB30	24"	4- 2x
HDU14	(36)16D5(1/4x2 1/2	1"-55TB30	24"	4- 2x

2 TYPICAL HOLDOWN TO CONC.

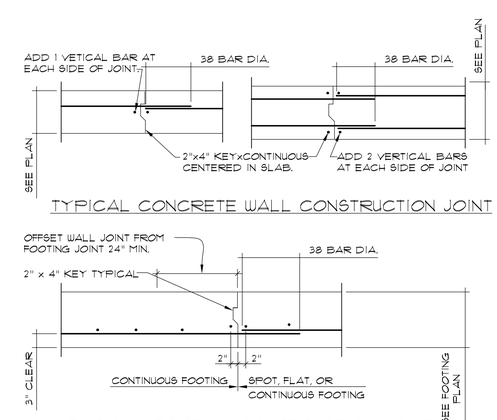

6 TYP. FTG. & WALL CONSTRUCTION JOINT

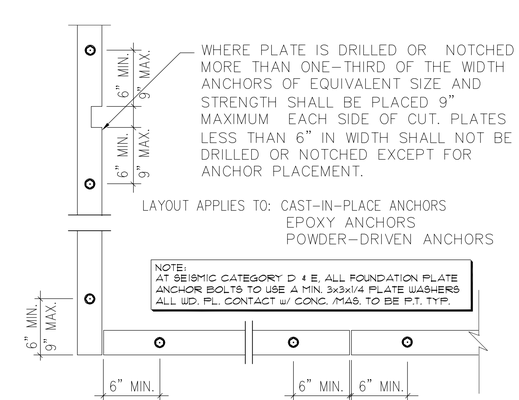

3 TYPICAL ANCHOR BOLTS LAYOUT

LICENSED PROFESSIONAL ENGINEER No. 268029 HUA SHEN EXP. 3/31/27 STATE OF UTAH
5/28/2025

GEURTLER ADU
685 EAST 1825 SOUTH
BOUNTIFUL, UTAH

No.	Date	Issue Notes

Project ID 6E15086
Scale
Drawing No.
Project Manager
Drawn By
Reviewed By
Date
CAD File Name

Design Firm: KF2 ARCHITECTS, 1234 S. 500 E., SALT LAKE CITY, UTAH 84105
Consultant: Green Engineers, Inc. Structural/Seismic Consultants, 4175 S. Cottonwood Ave, Murray, UT 84107

Project Title: GEURTLER ADU, 685 EAST 1825 SOUTH, BOUNTIFUL, UTAH
Sheet Title
Scale
Sheet No.

S1.2

AutoCAD Version: 13_c4
April 08, 1998, 3:28:37 p.m.
Drawing: C:\W13\COM\PHOTOS\S12.DWG (N.A2)

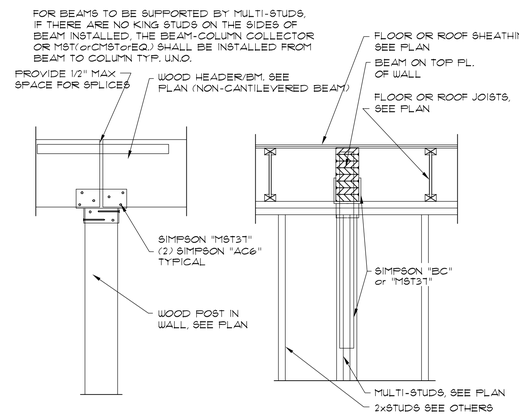

10

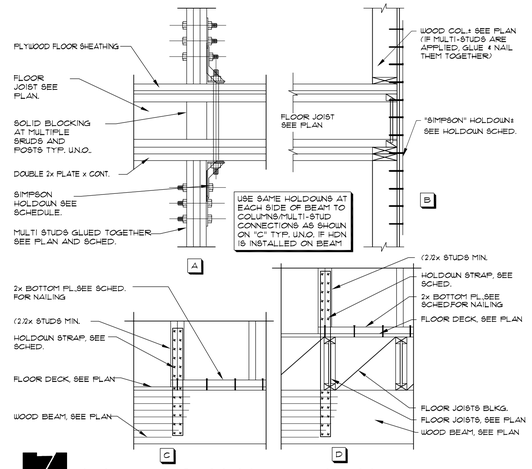

7 HOLDOWNS AT FLOOR TO FLOOR

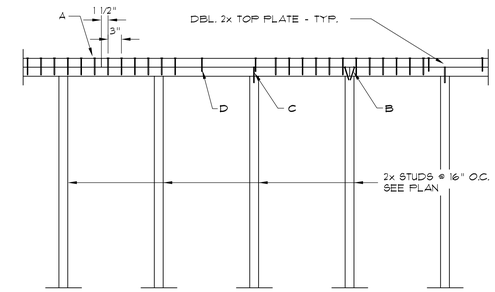

NAILING SCHEDULE	
MARK	DESCRIPTION
A	(24) 16d NAILS AT 3"O.C. .
B	2 - 16d NAILS AT THE END OF EACH PLATE (TOP OR BOTTOM) 4 - TOTAL.
C	2 - 16d NAIL AT EACH STUD.
D	NAIL TOP AND BOTTOM PLATES TOGETHER WITH 2 - 16d NAILS AT 16"O.C. TYPICAL.

THE TOP PL'S. HAVE TO BE INSTALLED CONTINOUSLY. IF THEY ARE DIS-CONTINUED BY STEEL COLUMNS, PIPES ETC. INSTALL CS16x24"MIN.(12" FROM EA. SIDE) TO TOP PLATE TYP. U.N.O.

4 TYPICAL TOP PLATE SPLICE

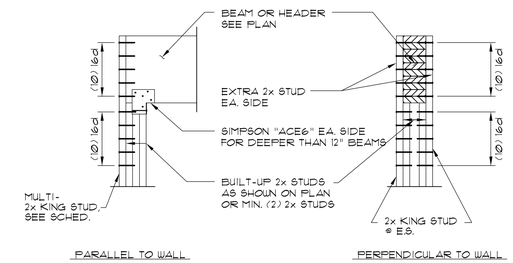

NOTE: FOR BEAMS DEEPER THAN 16", ONE SIMPSON "MST60" SHALL BE USED TO CONNECT BEAM TO THE MULTI-STUDS TYP. U.N.O.

1 TYPICAL WOOD HEADER OR BEAM TO MULTI-STUDS CONNECTION

NAIL/STAPLE EQUIVALENT TABLE.				
FLOORS AND ROOF				
NAILS		STAPLES		
SIZE	SPACING	SIZE	SPACING	LENGTH
8d	6"	14 GA	6"	1 1/2"
8d	4"	14 GA	4"	1 1/2"
8d	2 1/2"	14 GA	2 1/2"	1 1/2"
8d	2"	14 GA	2"	1 1/2"
10d	6"	14 GA	4"	1 5/8"*
10d	4"	14 GA	2 1/2"	1 5/8"*
10d	2 1/2"	14 GA	2"	1 5/8"*
* IN 3/4" PLYWOOD USE 2" STAPLES				
WALL				
3/8" PLYWOOD				
8d	6"	14 GA	6"	1 3/8"
8d	4"	14 GA	4"	1 3/8"
8d	3"	14 GA	3"	1 3/8"
8d	2"	14 GA	2"	1 3/8"
1/2" PLYWOOD				
8d	6"	14 GA	6"	1 1/2"
8d	4"	14 GA	3"	1 1/2"
8d	3"	14 GA	2 1/2"	1 1/2"
10d	6"	14 GA	4"	1 1/2"
10d	4"	14 GA	3"	1 1/2"
10d	3"	14 GA	2"	1 1/2"

8 NAIL/STAPLE EQUIVALENT TABLE

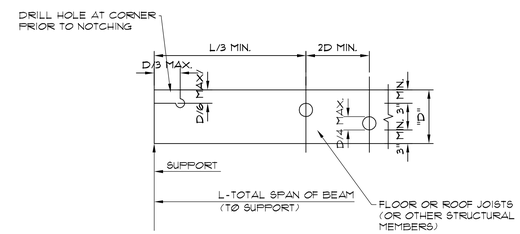

NOTE: NOTCHES AND DRILLED HOLES AS SHOWN ABOVE MAY BE USED ONLY WITH THE APPROVAL OF THE STRUCTURAL ENGINEER

5 TYP. HOLES AND NOTCHING IN BEAMS

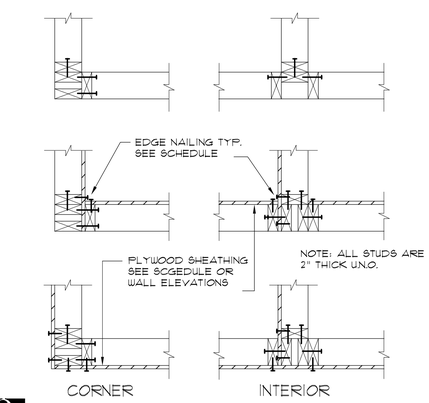

2 TYPICAL WALL INTERSECTION FRAMING

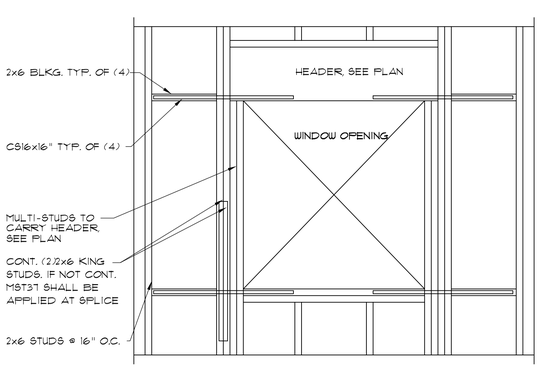

12 REINFORCED WINDOW OPNG. AS SHOWN ON PLAN AS 4

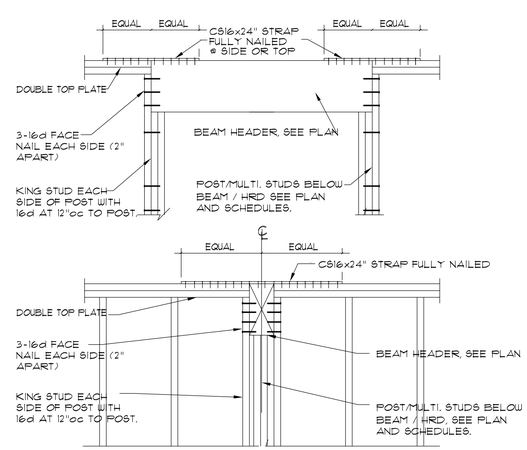

9 TYP. TOP PL. THRU BEAM HEADER IN WALL

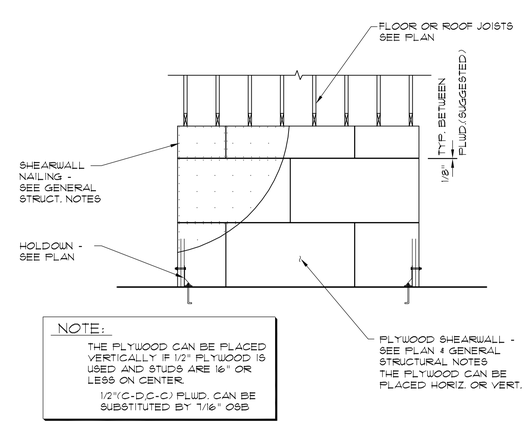

NOTE:
THE PLYWOOD CAN BE PLACED VERTICALLY IF 1/2" PLYWOOD IS USED AND STUDS ARE 16" OR LESS ON CENTER.
1/2"(C-D,C-C) PLWD. CAN BE SUBSTITUTED BY 7/16" OSB.

6 TYPICAL SHEAR WALL ELEVATION

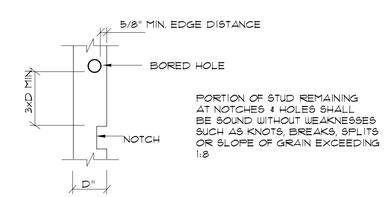

WOOD STUD SIZE	BEARING		NON-BEARING	
	MAX. HOLE (40%)	MAX. HOLE (25%)	MAX. HOLE (60%)	MAX. HOLE (40%)
2x4	1 3/8"	7/8"	2 1/8"	1 3/8"
2x6	2 3/16"	1 3/8"	3 5/16"	2 3/16"

3

LICENSED PROFESSIONAL ENGINEER
No. 260129
HUA SHEN
EXP. 3/31/27
STATE OF UTAH
5/28/2025

GEURTLER ADU
685 EAST 1825 SOUTH
BOUNTIFUL, UTAH

No.	Date	Issue Notes

Project ID SE15086
Scale
Drawing No.
Project Manager
Drawn By
Reviewed By
Date
CAD File Name

Design Firm
KP2 ARCHITECTS
1234 S. 300 E.
SALT LAKE CITY, UTAH 84105
Consultant
Shen Engineers, Inc.
Structural/Seismic Consultants
457 s. fortuna way
bountiful, ut 84010

Project Title
GEURTLER ADU
685 EAST 1825 SOUTH
BOUNTIFUL, UTAH
Sheet Title
Scale
Sheet No.
S1.3

AutoCAD Version: 13.0s
Plot Date: Wed, 28-3-7
Drawing: C:\R13\COM\PROTOS\S12.DWG (RAD)

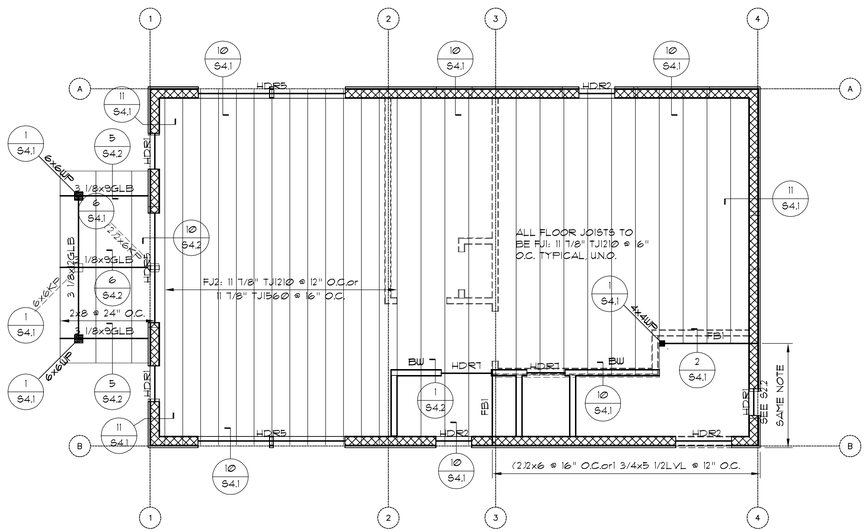

UPPER FLOOR FRAMING PLAN

SCALE 1/4" = 1'-0"

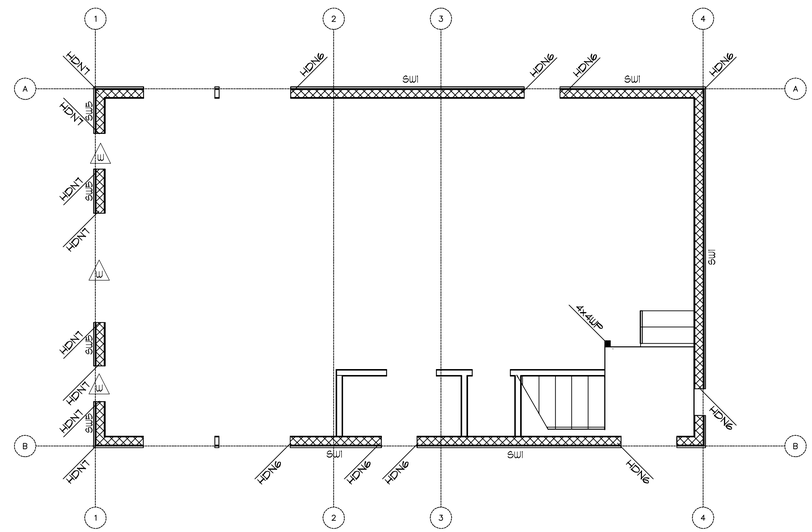

MAIN LEVEL LATERAL PLAN

SCALE 1/4" = 1'-0"

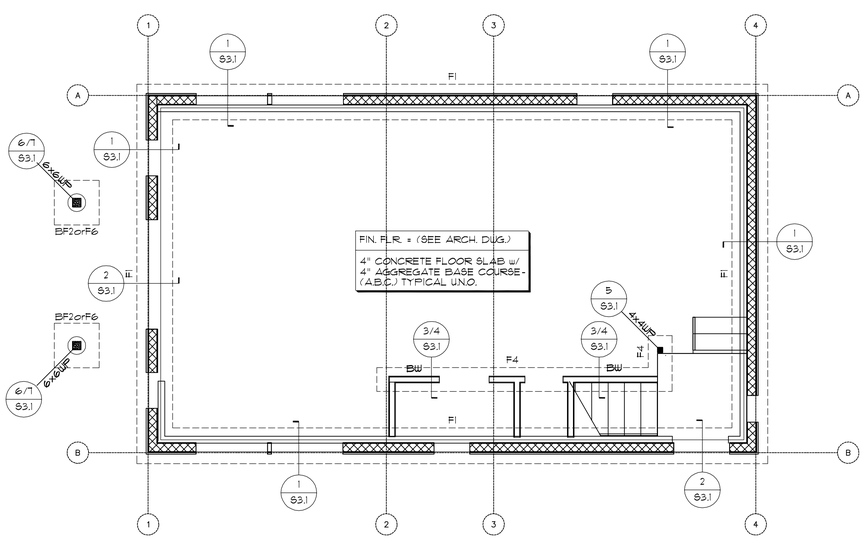

FOOTING & FOUNDATION PLAN

SCALE 1/4" = 1'-0"

BF1: 20"ø BIGFOOT FTG. w/ 8" CONC. SONO TUBE PIER w/ (4)#4 V.#3 TIES @ 8" O.C.+(3)#3 TIES TOP
BF2: 24"ø BIGFOOT FTG. w/ 8" CONC. SONO TUBE PIER w/ (4)#4 V.#3 TIES @ 8" O.C.+(3)#3 TIES TOP
BF3: 28"ø BIGFOOT FTG. w/ 12" CONC. SONO TUBE PIER w/ (4)#4 V.#3 TIES @ 12" O.C.+(3)#3 TIES TOP
BF4: 32"ø BIGFOOT FTG. w/ 12" CONC. SONO TUBE PIER w/ (4)#4 V.#3 TIES @ 12" O.C.+(3)#3 TIES TOP
BF5: 36"ø BIGFOOT FTG. w/ 12" CONC. SONO TUBE PIER w/ (4)#4 V.#3 TIES @ 12" O.C.+(3)#3 TIES TOP

FOUNDATION PLAN NOTES:

1. SEE GENERAL STRUCTURAL NOTES SHEET AND STANDARD CONCRETE DETAIL SHEET FOR
   A. GENERAL STRUCTURAL NOTES
   B. TYPICAL EXCAVATION ADJACENT TO FOOTING
   C. TYPICAL SLAB JOINT DETAILS
   D. TYPICAL STEPPED FOOTING
2. WS - DENOTES CONCRETE WALL STEP.
3. F-1 - DENOTES FOOTING MARK - SEE FOOTING SCHEDULE.
4. K.C.J. - DENOTES KEYED CONSTR. JOINT - SEE STANDARD DETAIL.
5. C.J. - DENOTES CONTROL JOINT - SEE STANDARD DETAIL.
6. F-----S - DENOTES FOOTING STEP, SEE DETAIL TYPICAL.
7. CONTRACTOR TO VERIFY ALL DIMENSIONS AND ELEVATIONS WITH ARCHITECTURAL DRAWINGS PRIOR TO CONSTRUCTION. SEE ARCHITECTURAL FOR ALL DIMENSIONS, SLAB SLOPES & DEPRESSIONS NOT NOTED.
8. ALL SLABS ON GRADE ARE TO BE JOINTED AT NO MORE THAN 15'-0" EACH WAY USING JOINTS PER STANDARD DETAIL. IN ADDITION, NO SECTION OF CONCRETE SHALL HAVE AN ASPECT RATIO OF GREATER THAN 1 1/2:1. PROVIDE (2) #4 x 4'-0" MID-HEIGHT SLAB BARS ADJACENT TO ALL DISCONTINUOUS JOINT LOCATIONS. ALL COLUMN ISOLATION JOINT CORNERS ARE TO BE INTERSECTED BY A SLAB JOINT OR REINFORCED WITH SLAB BARS PER ABOVE. SUBMIT COMPLETE JOINT LAYOUT PLAN TO THE ARCHITECT FOR PRIOR REVIEW.
9. ALL WOOD TO CONTACT w/ CONC. OR MASONRY TO BE P.T. OR REDWOOD TYP.
10. ALL FOUNDATION PL. ANCHOR BOLTS TO USE A MIN. 3x3x1/4 PL. WASHERS TYP.

SCHEDULE FOR SIMPSON HANGERS ON BEAMS AND JOISTS TYP.
USE "LSSJ/LSSR" FOR SKEWED & SLOPED JOISTS
USE "LRUZ" FOR SLOPED JOISTS.
USE "SUR/SUL/HSUR/HSUL" FOR SKEWED BEAMS
USE "HUC/HUCQ" AS CONCEALED HANGERS

	TOP MOUNT HANGERS	FACE MOUNT HANGERS
9 1/2" TJI SERIES	ITS/BA/WP	IUS
DBL. 9 1/2" TJI	MIT/BA/ITS	MIU
11 7/8" TJI	ITS/BA/WP	IUS
DBL. 11 7/8" TJI	MIT/BA/ITS	MIU
1 3/4x LVLorPSL	ITS/BA/WP	HU
3 1/2x LVLorPSL	HGLT	HU/HGU
5 1/4x LVLorPSL	HGLTV	HU/HGU
7x LVLorPSL	HGLTV	HGUS
3 1/8x GLB	HGLT	
5 1/8x GLB	HGLTV	
6 3/4x GLB	HGLTV	
8 3/4x GLB	HGLST	
2x JOISTS	HU	LUS/HU
(2)2x	HUS-2TF	LUS-2/HU-2
(3)2x	HUS-3TF	LUS-3/HU-3

ON STRUCTURAL PLANS AND DETAILS, THERE ARE SOME OPTIONS. ARCHITECTS PLEASE SPECIFY THE OPTIONS. IF G.C. OR OWNER HAS ANY CONCERNS ON THE OPTIONS, CONTACT ARCHITECTS TO CLARIFY THEM TYP. U.N.O.

ALL FLOOR JOISTS TO BE FJ1: 11 7/8" TJI210 @ 16" O.C. TYPICAL, U.N.O.
FJ2: 11 7/8" TJI210 @ 12" O.C. or11 7/8" TJI560 @ 16" O.C.

CONTRACTOR PLEASE SEE ARCH. DWG. FOR PLUMBING LOCATION OF BATHTUB , TOILET. PLEASE OFFSET JOISTS WHERE OCCURS. USE DOUBLE JOISTS UNDER BATHTUB, KITCHEN ISLAND, AND OTHER HEAVY STUFFS.

NOTE: FOR ALL (2)1 3/4x11 7/8LVL BM PROVIDE MIN. (2)2x6 AS END BEARINGS TYP. U.N.O.

UB1/MB1/LB1/FB1: (2)1 3/4x11 7/8 LVL
UB2/MB2/LB2/FB2: (3)1 3/4x11 7/8 LVL or 5 1/8x12 GLB

THE GLB BEAMS CAN BE SUBSTITUTED BY PSL (or LVL/BEAMS AS FOLLOWS:
(IT DOESN'T WORK FROM PSL(or LVL) TO GLB TYP.)

3 1/8x9GLB	3 1/2x9 1/2PSL/(2)1 3/4x9 1/2LVL
3 1/8x12GLB	3 1/2x11 7/8PSL/(2)1 3/4x11 7/8LVL
5 1/8x12GLB	5 1/4x11 7/8PSL/(3)1 3/4x11 7/8LVL
5 1/8x15GLB	5 1/4x16PSL/(3)1 3/4x16LVL
5 1/8x18GLB	5 1/4x18PSL/(3)1 3/4x18LVL
6 3/4x12GLB	7x11 7/8PSL/(4)1 3/4x11 7/8LVL

TYPICAL DECK PLANK:
2x6 REDWOOD (OR P.T. WOOD) w/ (2)16d @ EA. JOIST AND (4) 16d @ END OF PLANK TO EA. JOIST TYPICAL UNLESS NOTED OTHERS

TYPICAL FLOOR DECK:
3/4" PLWD./OSB SHEATHING, SPAN RATING 40/20 SEE GENERAL STRUCTURAL NOTES-TYPICAL GLUE AND NAIL TO ALL JOISTS
10d @ 6" O.C. AT ALL PANEL EDGES, SUPPORTED EDGES, AND ALL TOP OF SHEAR WALLS
10d @ 12" O.C. AT ALL PANEL FIELD
PLACE SHEATHING LONG-WISE ACROSS FRAMING, STAGGER END JOINTS. UNBLOCKED DIAPHRAGM.

FLOOR FRAMING PLAN NOTES:

1. SEE GENERAL STRUCTURAL NOTES AND STANDARD FRAMING DETAILS FOR
   A. GENERAL STRUCTURAL NOTES
   B. TYPICAL HEADER DETAIL
   C. TYPICAL SHEAR WALL DETAIL
   D. TYPICAL TOP PLATE SPLICE DETAIL
2. HDR-1 = HEADER SEE HEADER SCHEDULE TYPICAL.
3. ALL FLOOR MEMBERS ARE TO BE 11 7/8" TJI 210 TYPICAL. U.N.O.
4. ESTABLISH AND VERIFY ALL OPENINGS & INSERTS FOR MECHANICAL, ELECTRICAL & PLUMBING WITH THE APPROPRIATE TRADES, DRAWINGS AND SUBCONTRACTORS PRIOR TO CONSTRUCTION.
5. HANGING CEILING, DUCTWORK OR OTHER ITEMS FROM THE PLYWOOD DECK IS NOT ALLOWED.
6. PROVIDE JOIST BRIDGING AS PER MANU-FACTURER'S SPECIFICATION.
7. PROVIDE SOLID BLOCKING AT JOIST BEARING TYPICAL U.N.O.
8. PROVIDE 1/8" GAP ON WALL SHEATHING PLWD. OR FOLLOW MANUFACTURER'S SPECIFICATION.
9. SEE DETAIL FOR MULTI-STUDS TO WOOD BEAM/HEADER CONNECTION TYPICAL U.N.O.
10. " —Ⓑ— INDICATES MOMENT CONN. TYP. U.N.O.
11. SHEAR WALLS SHOWN ARE BELOW FRAMING LEVEL. COORDINATE WITH FRAMING PLANS. HOLDOWN SHOWN ARE LAYING ON FRAMING LEVEL. COORDINATE WITH FRAMING PLANS.

CONCRETE POUR NOTES:

1. VERIFY FTG STEP LOCATIONS AND HEIGHT IN FIELD PRIOR TO FORMING FOOTINGS. MAKE FTG REBAR CONTINUOUS THROUGH FTGS WITH BENT BARS AT CORNERS. LAP BARS 40 BAR DIAMETERS AT SPLICES AND TIE.
2. DO NOT POUR ANY CONCRETE UNTIL THE FORMS ARE ADEQUATELY BOLSTERED AND SUPPORTED AND ALL REBAR IS IN PLACE AND SECURED.
3. DO NOT PERMIT FIN. GRADE TO COME CLOSER THAN 6" TO TOP OF CONCRETE.
4. FOR FOUNDATIONS REBAR INSPECTIONS FOR FOUNDATION WALLS OVER 8'-0", FORMS ARE NOT TO BE INSTALLED ON ONE SIDE UNTIL AFTER THE REBAR HAS BEEN INSPECTED AND APPROVED.
5. PROVIDE A U-FER GROUND DURING CONSTRUCTION OF FOOTING & FOUNDATION.
6. ALL FASTENERS (IE NAILS, SCREWS, ANCHOR BOLTS, ETC.) WHICH ARE TO BE INSTALLED IN PRESERVATIVE TREATED WOOD (IE SILL PLATES) SHALL BE HOT-DIPPED, ZINC-COATED GALVANIZED STEEL, STAINLESS STEEL, SILICON BRONZE OR COPPER(MEET THE REQUIREMENTS OF IBC 2304.9.5.)
7. ALL L ANGLES FOR SUPPORTING VENEERS ARE HOT-DIPPED GALVANIZED.

FOOTING SCHEDULE

BASED ON SOIL BEARING = 1500 PSF
ARCH/CONTRACTOR VERIFY IT

MARK	SIZE	REINFORCING	REMARKS
F1	2'-0" x CONT. x 12"	(2)#5/(3)#4 CONT.	
F2	2'-6" x CONT. x 12"	(3)#5/(4)#4 CONT.	
F3	3'-0" x CONT. x 12"	(3)#5/(4)#4 CONT.	
F4	1'-4" x CONT. x 12"	(2) #4 CONT.	THICKENED SLAB
F5	2'-0" SQ. x 12"	(2)#5/(3)#4E.W.	
F6	2'-6" SQ. x 12"	(3) #5 E.W.	
F7	3'-0" SQ. x 12"	(3) #5 E.W.	
F8	3'-6" SQ. x 12"	(4) #5 E.W.	
F9	4'-0" SQ. x 12"	(4) #5 E.W.	

LICENSED PROFESSIONAL ENGINEER
No. 286025
HUA SHEN
EXP. 3/31/27
STATE OF UTAH
5/28/2025

GEURTLER ADU
685 EAST 1825 SOUTH
BOUNTIFUL, UTAH

No.	Date	Issue Notes

Project Manager | Drawn By | Reviewed By | Date | CAD File Name
Project ID SES2086 | Scale | Drawing No.

Design Firm: KP2 ARCHITECTS, 1234 S 900 E, SALT LAKE CITY, UTAH 84105
Consultant: Shen Engineers, Inc. STRUCTURAL/MECHANICAL CONSULTANTS, 4175 S. Richmond St #102, Murray, UT 84123

Project Title: GEURTLER ADU, 685 EAST 1825 SOUTH, BOUNTIFUL, UTAH
Sheet Title
Scale
Sheet No.
S2.1

AutoCAD Version: 13_c4
April 06, 1998 3:28:37 p.m.
Drawing: C:\PROJECTS\KP\PROJ\SES2086\S2.1.DWG (R.dd)

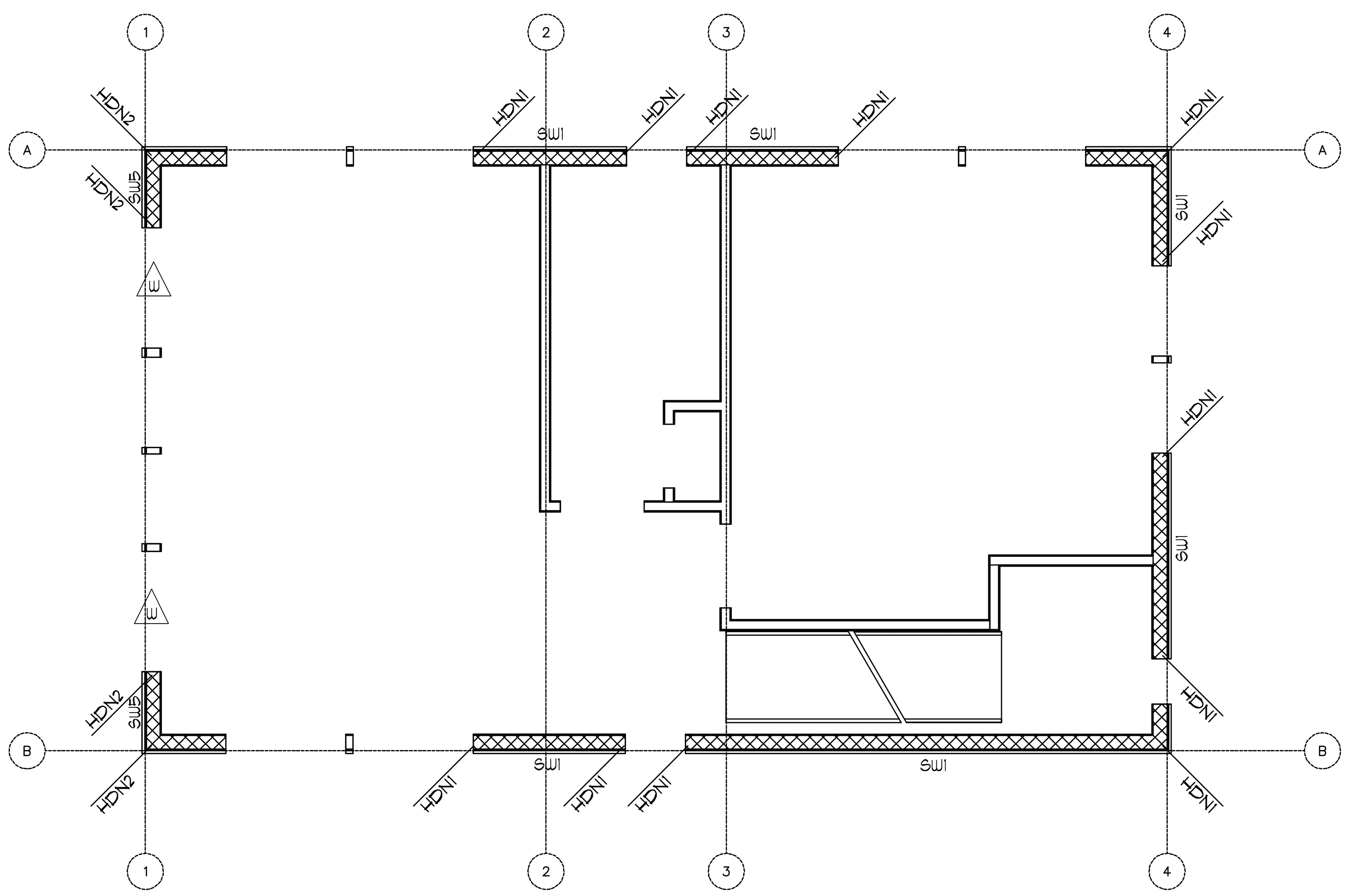

UPPER LEVEL LATERAL PLAN

SCALE 1/4" = 1'-Ø"

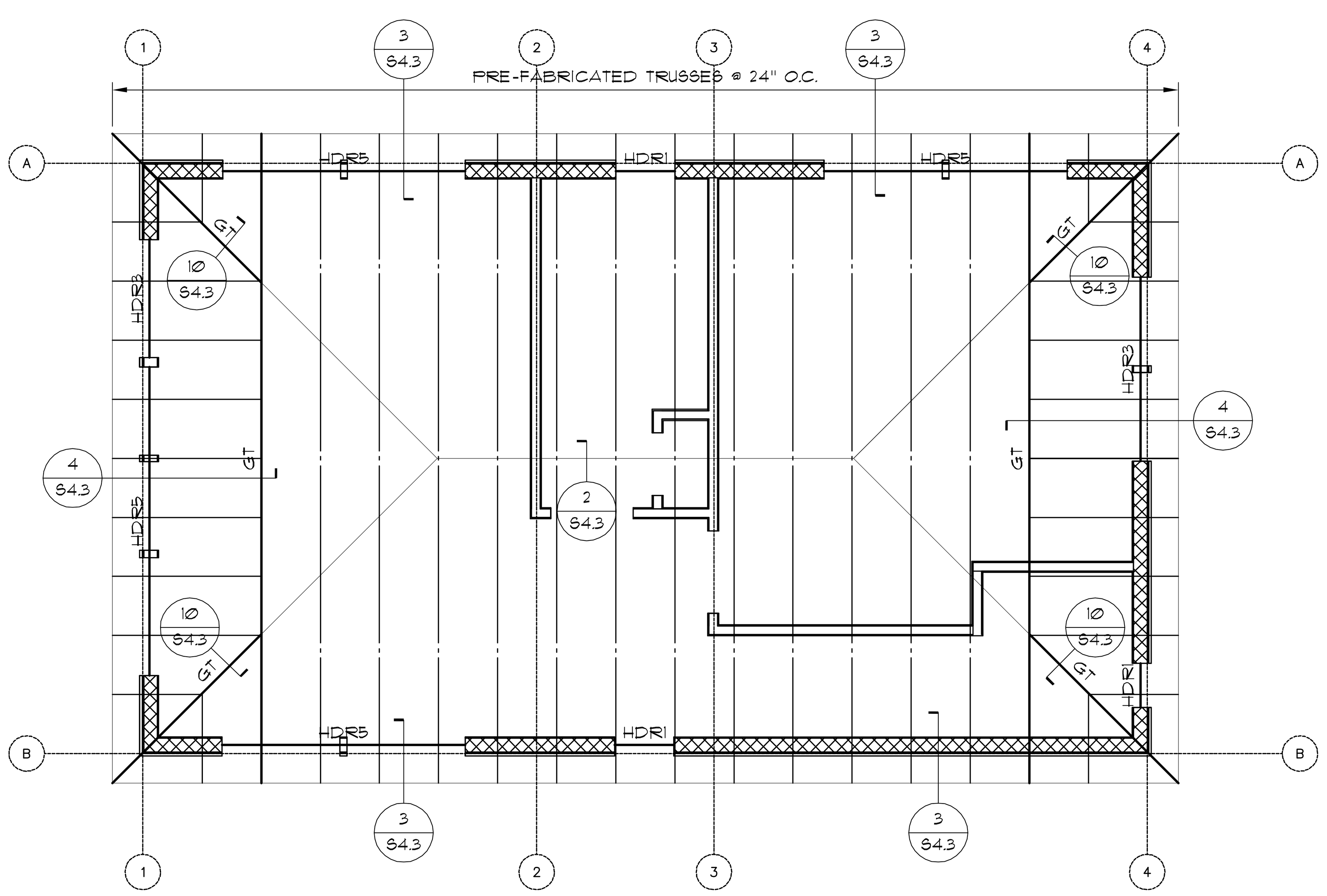

ROOF FRAMING PLAN

SCALE 1/4" = 1'-Ø"

HDR: HEADER, SEE SCHEDULE
HDN: HOLDOWN, SEE SCHEDULE
SW: WOOD SHEAR WALL, SEE SCHEDULE
BW:BEARING WALL
BWA: BEARING WALL ABOVE
NBW: NON-BEARING WALL
OBR: OVER-BUILD ROOF
GT: GIRDER TRUSS
KP: KING POST
DJ: DOUBLE JOISTS

THE CONVERSION CHARTS OF TJI & BCI ONE WAY CONVERTING FROM TJI TO BCI ONLY w/NO REVERSE ALLOWED

TJI110	BCI5000 1.7
TJI210	BCI6000 1.8
TJI230	BCI6500 1.8
TJI360	BCI60 2.0
TJI560	BCI90-2.0

THE CONVERSION CHARTS OF SIMPSON & MITEK

FOR ANYTHING NOT LISTED BELOW, GO ONLINE OF MITEK-US.COM TO FIND THE "REFERENCE NUMBER CONVERSION CHART TYP. U.N.O. or USE THE SAME OR BETTER SIZE/GAUGE/THICKNESS/SPACE/NAILING/SCREWING PATTERNS AND ETC. MATERIALS TYP. U.N.O.

SIMPSON/MITEK CONVERSIONS:

A34/MP34, A35/MPA1, BC4/C44, CB/KCB, CS16/RS150 ECC/KECC, ECCQ/LECCQ, H/RT, HD12/TD12, HDU/PHD, HL/KHL, HU/HD, JB/HL, L/AC, LS/MP, LTP/MP, LU/JL, LUS/JUS, MST/KST2, MTS/MTW, PA/TA, PB/WE, SDS/WDS ST/ST, STHD/STHD
SET-XP/CIA-EA, GLB/KGLB, LTT/LTS, HTT/LTT1, AB/PA, EPB/APB/

(H): BEAMS ON HIGH ROOF
(M): BEAMS ON MAIN/MIDDLE ROOF
(L): BEAMS ON LOW ROOF
(UP): INSTALL BEAM UP TO THE JOIST SPACE TO HIDE THE BEAM
(DN/DOWN): INSTALL BEAM RIGHT BELOW JOISTS

PROVIDE MIN. (2)2x6(FOR 2x6 WALL)or(3)2x4 (FOR 2x4 WALL) AS END-BRG. OF THE BEAMS OR GIRDER TRUSSES TYP. IF NOT CALLED OUT U.N.O.

EPOXY BOLTS CALLED OUT ON PLAN ARE SIMPSON "SET" FOR CMU APPLICATION (ICC ESR1772) & HILTI HIT RE 500-SD EPOXY BOLTS FOR CONC. APPLICATIONS (ICC ES ESR 2322).
THE INSTALLING REQUIREMENT FOR ANCHOR BOLTS AND/OR REBAR DOWELS ARE AS FOLLOWED:

DIAMETER/DRILL DIA./EMBED. DEPTH/EDGE DIST./SPACING DIST.				
1/2"	5/8"	4 1/4"	1 3/4"	6 3/8"
5/8"	3/4"	5"	1 3/4"	7 1/2"
3/4"	7/8"	6 3/4"	1 3/4"	10 1/8"

TYPICAL ROOF DECK:

5/8" PLWD/OSB SHEATHING, SPAN RATING 32/16
SEE GENERAL STRUCTURAL NOTES-TYPICAL NAILING:
10d @ 6" O.C. AT ALL PANEL EDGES, SUPPORTED EDGES, AND ALL TOP OF SHEAR WALLS
10d @ 12" O.C. AT ALL PANEL FIELD
PLACE SHEATHING LONG-WISE ACROSS FRAMING, STAGGER END JOINTS. UNBLOCKED DIAPHRAGM.

ROOF TRUSS DESIGN CRITERIA

MARK	TOP CHPRD DEAD LOAD	BOTTOM CHD. DEAD LOAD	TOP CHPRD SNOW LOAD	TOTAL LOADS
REGULAR TRUSSES	20 PSF	5 PSF	**35 PSF**	**60 PSF**
GIRDER TRUSSES	20 PSF	5 PSF	**35 PSF**	**60 PSF**

NOTE: SNOW DRIFT SHALL BE INCLUDED ON DESIGN IF APPLIED
MIN. 1/2 OF ROOF SNOW LOAD SHALL BE APPLIED TO LOWER ROOF SNOW DRIFT.
SEE PLAN FOR POINT LOADS TO GIRDER TRUSSES IF APPLIED.
MIN. (3)2x6 FOR 2x6 STUD WALLSor(3)2x4 FOR 2x4 STUD WALLS TO SUPPORT THE GIRDER TRUSSES TYP. U.N.O.

FOR TRUSS CONNECTION RELATED CONNECTORS, REFER TO TRUSS MANUFACTURER'S DESIGN PACKAGES. THE FOLLOWING CONNECTORS ARE THE SUGGESTIONS: THA/THAC/LUS/MUS/HHUS/HUS/HGUS FOR SINGLE OR MULTI-TRUSSES TO BEAM/GIRDER TRUSSES. THAR/THAL FOR SKEWED TRUSSOR MULTI-TRUSSES TO BEAM/GIRDER TRUSSES

A TRUSS PACKAGE MUST BE SUBMITTED TO THE BUILDING OFFICIAL AS A DEFERRED SUBMITTAL. PRIOR TO SUBMITTING TO THE CITY, THE PACKAGE MUST BE REVIEWED BY THE ENGINEER OF RECORD AND STAMPED FOR GENERAL CONFORMANCE. NO TRUSSES ARE TO BE INSTALLED UNTIL APPROVED BY THE BUILDING OFFICIAL.

RB1: 5 1/8x12 GLB
RB2: (2)1 3/4x11 7/8 LVL, RB2A: 1 3/4x11 7/8LVL
RB2A ON FASCIA OF THE EAVE/GABLE TYP. U.N.O.
RB3: (3)1 3/4x11 7/8 LVL or 5 1/8x12 GLB

FOR ALL ROOF JOISTS/TRUSSES TO THE FASCIA BEAM RB-2A CONNECTIONS, USE SIMPSON "L90" ON EACH JOIST/TRUSS OR EQUAL TYP. U.N.O.

ROOF FRAMING PLAN NOTES:

1. SEE GENERAL STRUCTURAL NOTES SHEET AND STANDARD WOOD FRAMING DETAILS FOR
   A. GENERAL STRUCTURAL NOTES
   B. TYPICAL HEADER DETAIL
   C. TYPICAL TOP PLATE SPLICE DETAIL
   D. TYPICAL SHEAR WALL DETAIL
2. K.P. = KING POST, SEE PLAN FOR SIZE AND LOCATION TYPICAL.
3. ALL ROOF JOISTS OR TRUSSES ARE CALLED OUT ON PLAN. SEE PLAN FOR SIZE & SPACE TYP.
4. ESTABLISH AND VERIFY ALL OPENINGS & INSERTS FOR MECHANICAL, ELECTRICAL & PLUMBING WITH THE APPROPRIATE TRADES, DRAWINGS AND SUBCONTRACTORS PRIOR TO CONSTRUCTION.
5. HANGING CEILING, DUCTWORK OR OTHER ITEMS FROM THE PLYWOOD DECK IS NOT ALLOWED.
6. PROVIDE JOIST/TRUSS BRIDGING AS PER MANUFACTURER'S SPECIFICATION.
7. PROVIDE SOLID BLOCKING AT JOIST/TRUSS BEARING TYPICAL U.N.O.
8. PROVIDE 1/8" GAP ON ROOF DECK PLYWOOD OR FOLLOW MANUFACTURER'S SPECIFICATION.
9. SEE STANDARD DETAIL FOR MULTI-STUDS TO WOOD BEAM/HEADER CONNECTION TYPICAL.
10. SHEAR WALLS SHOWN ARE BELOW FRAMING LEVEL. COORDINATE WITH FRAMING PLANS.

HEADER SCHEDULE

MARK	SIZE	END BRG.	REMARKS
HDR-1	(3)2x6	(2)2x6	
HDR2	(3)2x8	(2)2x6	or (3)1 3/4x5 1/2LVL
HDR-3	(3)2x10	(2)2x6	or (3)1 3/4x7 1/4LVL
HDR-4	(3)2x12	(3)2x6	or (3)1 3/4x9 1/2LVL
HDR-5	5 1/8x12 GLB	(3)2x6	or (3)1 3/4x11 7/8LVL
HDR-6	(2)2x6	(2)2x4	
HDR-7	(2)2x8	(3)2x4	or (2)1 3/4x5 1/2LVL
HDR-8	(2)2x10	(3)2x4	or (2)1 3/4x7 1/4LVL
HDR-9	(2)2x12	(3)2x4	or (2)1 3/4x9 1/2LVL
HDR-10	3 1/8x12 GLB	(4)2x4	or (2)1 3/4x11 7/8LVL

NOTES:
1. GLULAM BEAMS SHALL BE COMBINATION SYMBOL 24F-V4 FOR REGULAR BEAM AND 24F-V8 FOR CANTILEVERED BEAM TYPICAL.
2. ALL GLULAM BEAMS TO BE ZERO CAMBER BEAMS U.N.O.
3. ALL MULTI-MEMBER BEAMS & STUDS SHALL BE NAILED TOGETHER w/(2) ROWS 16d @ 6" O.C. BOTH SIDES TYPICAL.

NUMBER OF KING STUDS ON EXTERIOR WALLS:
(FOR INTERIOR WALLS, ONE KING STUD TYP.)
ONE KING STUD FOR OPNG. 2'-0" TO 5'-0"
TWO KING STUDS FOR OPNG. 5'-0" TO 10'-0"
THREE KING STUDS FOR OPNG. 10'-0" TO 15'-0"
FOUR KING STUDS FOR OPNG. 15'-0" TO 20'-0"

SHEARWALL SCHEDULE

MARK	SHEATHING PLYWOOD	EDGE NAILING	INTER. NAILING	BOTTOM PLATE	NAILING THRU FLOOR / ANCHOR BOLTS TO CONC.	PANEL EDGE STUD	A35 BLKG. TO TOP PL. WHERE DRAG OCCURS
SW1	1/2" (C-D, C-C)	8d @ 6" O.C.	8d @ 12" O.C.	2xPL.	16d @ 6" O.C. 3/4" A.B. x 10" @ 48" O.C.	--	@ 28" O.C.
SW2	1/2" (C-D, C-C)	8d @ 4" O.C.	8d @ 12" O.C.	2xPL.	16d @ 3" O.C. 3/4" A.B. x 10" @ 32" O.C.	--	@ 18" O.C.
SW3	1/2" (C-D, C-C)	8d @ 3" O.C.	8d @ 12" O.C.	2xPL.	1/4" LAG BOLTS x5" @ 12" O.C. 3/4" A.B. x 10" @ 24" O.C.	--	@ 14" O.C.
SW4	1/2" (C-D, C-C)	8d @ 2" O.C.	8d @ 12" O.C.	2xPL.	1/4" LAG BOLTS x5" @ 9" O.C. 3/4" A.B. x 10" @ 32" O.C.	2xBLKG. MIN. 3xSTUDS MIN.	@ 11" O.C.
SW5	DBL.1/2"(C-D,C-C)	8d @ 4" O.C.	8d @ 12" O.C.	2xPL.	1/4" LAG BOLTS x5" @ 7" O.C. 3/4" A.B. x 10" @ 24" O.C.	2xBLKG. MIN. 3xSTUDS MIN.	@ 9" O.C.
SW6	DBL.1/2"(C-D,C-C)	10d @ 3" O.C.	10d @ 12" O.C.	2xPL.	1/4" LAG BOLTS x5" @ 6" O.C. 3/4" A.B. x 10" @ 16" O.C.	2xBLKG. MIN. 3xSTUDS MIN.	@ 7" O.C.

NOTE: FOR DOUBLE SIDED PLYWOOD SHEAR WALLS, THE PANEL JOINTS ON BOTH FACES TO BE OFFSET TO FALL ON DIFFERENT STUDS TYPICAL.
1/2"(C-D,C-C) PLWD CAN BE SUBSTITUTED BY 7/16" OSB TYP. U.N.O..
FOR SW4, FRAMING AT PANEL EDGES TO BE 3xSTUD AND NAILS TO BE STAGGERED TYP.
WHERE LAG BOLTS TO BE USED, THE RIM JOIST OR JOIST BLOCKING TO BE MIN. 3x MEMBER TYP.
MIN. DBL. JOISTS OR FBI TO SUPPORT SHEAR WALL ABOVE IF NO BEAM IS CALLEDOUT TYP. U.N.O.

HOLDOWN SCHEDULE

MARK	HOLDOWN EACH END TYPE	END STUD	ANCHOR BOLT	LOCATION
HDN1	MST37	(2)2xSTUDS MIN.	--	FLOOR TO FLOOR
HDN2	MST60	(2)2xSTUDS MIN.	--	FLOOR TO FLOOR
HDN3	DBL. MST60	(4)2xSTUDS MIN. or 6x6	--	FLOOR TO FLOOR
HDN4	HD12	(4)2xSTUDS MIN. or 6x6	--	FLOOR TO FLOOR
HDN5	HDU2/HDC5/HTT4 STHD10or10RJ	(2)2xSTUDS MIN.	SDS2.5/SSTB16	FOUNDATION
HDN6	HDU5/HD7/ STHD14or14RJ	(2)2xSTUDS MIN.	SDS2.5/SSTB24	FOUNDATION
HDN7	HDU8/HDQ8	(3)2xSTUDS MIN.	SDS2.5/SSTB28	FOUNDATION
HDN8	HDU11/HDQ8	(3)2xSTUDS MIN.	SDS2.5/SB1x30	FOUNDATION
HDN9	HDU14/HD12	(3)2xSTUDS MIN.	SDS2.5/SB1x30	FOUNDATION

NOTE: SAME SIZE EPOXY BOLTS CAN BE USED AS SUBSTITUTION OF SSTB'S.ANCHOR BOLTS TYP.
SEE SIMPSON'S FOR MIN. EMBEDED LENGTH.

LVL NAILING/BOLTING SCHEDULE:
ALL NAILS AND BOLTS ARE 2" FROM T&B

(2)1 3/4"x5 1/2"LVLS, (2)16d @ 12" O.C.
(2)1 3/4"x7 1/4"LVLS, (3)16d @ 12" O.C.
(2)1 3/4"x9 1/2"LVLS, (4)16d @ 6" O.C.
(2)1 3/4"x11 7/8"LVLS, (5)16d @ 6" O.C.
(2)1 3/4"x16"LVLS, (6)16d @ 6" O.C.
(2)1 3/4"x18"LVLS, (7)16d @ 6" O.C.

(3)1 3/4"x5 1/2"LVLS, (2)16d @ 12" O.C. E.S.
(3)1 3/4"x7 1/4"LVLS, (3)16d @ 12" O.C. E.S.
(3)1 3/4"x9 1/2"LVLS, (4)16d @ 6" O.C. E.S.
(3)1 3/4"x11 7/8"LVLS, (5)16d @ 6" O.C. E.S.
(3)1 3/4"x16"LVLS, (6)16d @ 6" O.C. E.S.
(3)1 3/4"x18"LVLS, (7)16d @ 6" O.C. E.S.

(4)1 3/4"x7 1/4"LVLS, (2)1/4"φ LAG BOLTS @ 24" O.C.
(4)1 3/4"x9 1/2"LVLS, (2)1/4"φ LAG BOLTS @ 16" O.C.
(4)1 3/4"x11 7/8"LVLS, (3)1/4"φ LAG BOLTS @ 12" O.C.
(4)1 3/4"x16"LVLS, (4)1/4"φ LAG BOLTS @ 16" O.C. E.S.
(4)1 3/4"x18"LVLS, (5)1/4"φ LAG BOLTS @ 12" O.C. E.S.

(5)1 3/4"x7 1/4"LVLS, (3)1/4"φ LAG BOLTS @ 32" O.C. E.S.
(5)1 3/4"x9 1/2"LVLS, (3)1/4"φ LAG BOLTS @ 24" O.C. E.S.
(5)1 3/4"x11 7/8"LVLS, (4)1/4"φ LAG BOLTS @ 16" O.C. E.S.
(5)1 3/4"x16"LVLS, (5)1/4"φ LAG BOLTS @ 16" O.C. E.S.
(5)1 3/4"x18"LVLS, (6)1/4"φ LAG BOLTS @ 12" O.C. E.S.

(W) INDICATES WINDOW OPENING REINFORCEMENT, SEE DETAIL **12/S1.3 TYP.**

ALL DBL. 2x JOISTS ARE TO BE CONNECTED w/GLUE AND w/(5)16d @ 6" O.C.
ALL DBL. TJI JOISTS ARE TO BE CONNECTED w/STIFF. PL.+GLUE w/(5)16d @ 6" O.C.
ALL MICRO-LAM DBL. BEAMS ARE TO BE CONNECTED w/GLUE AND (5)16d @ 6" O.C.
ALL DBL. STUDS ARE TO BE CONNECTED WITH (2)10d @ 6" O.C. STAGGERED

ICC ESR APPROVAL NUMBERS
TJI JOISTS: ICC ESR-1153
MICROLAMS: ICC ESR-2015
PARALLAMS: ICC ESR-2015

WOOD STUD WALLS ARE TO BE 2x6 DF#2 GRADE STUDS @ 16" O.C. OR BETTER TYP. U.N.O.

WOOD STUD WALL SCHEDULE

TYPE \ HEIGHT \ MARK	2x4 DF#2 @ 16" O.C.	2x6 DF#2 @ 16" O.C.	2x6 DF#2 @ 12" O.C.	1 3/4x5 1/2 LVL@16"O.C.	1 3/4x5 1/2 LVL@12"O.C.	2x8DF#2 @16"O.C.	1 3/4x7 1/4 LVL@16"O.C.
NON-BEARING INTERIOR WALLS	16'-0"	24'-0"	--				
BEARING INTERIOR WALLS	12'-0"	20'-0"	--				
NON-BEARING EXTERIOR WALLS	10'-0"	16'-0"	18'-0"				
BEARING EXTERIOR WALLS	8'-0"	12'-0"	16'-0"	18'-0"	21'-0"	18'-0"	25'-0"

NOTES: 1. FOR THE CASE NOT FOUND HERE, INFORM ENG. FOR DESIGN.

DIAPHRAGM SHEATHING NAILS OR OTHER APPROVED SHEATHING CONNECTORS SHALL BE DRIVEN SO THAT THEIR HEAD OR CROWN IS FLUSH WITH THE SURFACE OF THE SHEATHING.

CEILING JOIST SCHEDULE

2x4 STUD GRADE @ 24"/16" O.C.	2x6 DF#2 GRADE @ 24"/16" O.C.	2x8 DF#2 GRADE @ 24"/16" O.C.	REMARKS
11'/12'	16'/18'	22'/24'	

NOTES: FOR THE CASE NOT FOUND HERE, INFORM ENG. FOR DESIGN.

LICENSED PROFESSIONAL ENGINEER
No. 260129
HUA SHEN
EXP. 3/31/27
STATE OF UTAH
5/28/2025

GEURTLER ADU
685 EAST 1825 SOUTH
BOUNTIFUL, UTAH

Issue Notes | Date | No.

Project ID SE25086
Scale
Drawing No.
Project Manager
Drawn By
Reviewed By
Date
CAD File Name

Design Firm
KP2 ARCHITECTS
1234 S. 900 E.
SALT LAKE CITY, UTAH 84105

Consultant
Shen Engineers, Inc.
Structural/Seismic Consultants
4157 s. fortuna way
millcreek, ut 84124

Project Title
GEURTLER ADU
685 EAST 1825 SOUTH'
BOUNTIFUL, UTAH

Sheet Title
Scale
Sheet No.
S2.2

AutoCAD Version: 13_c4
April 08, 1996 3:28:37 p.m.
Drawing: C:\R13\COM\PROTOS\D12.DWG (RJG)

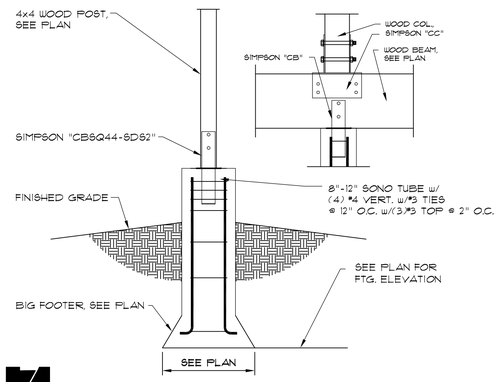

7

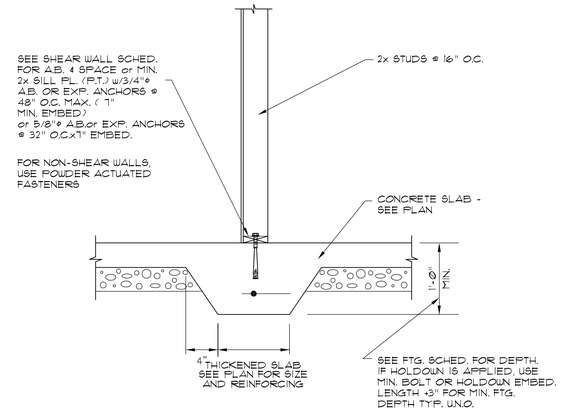

4

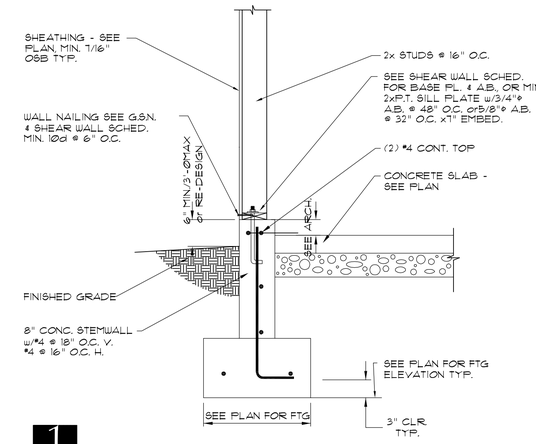

1

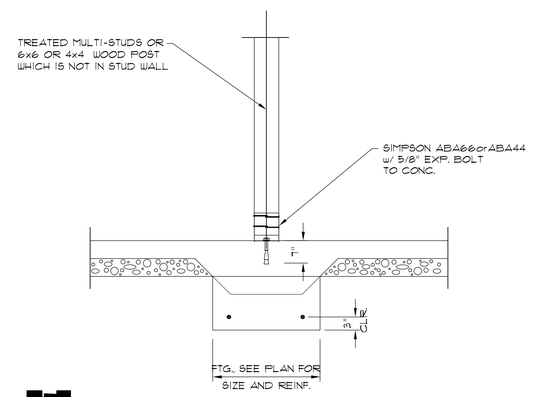

5

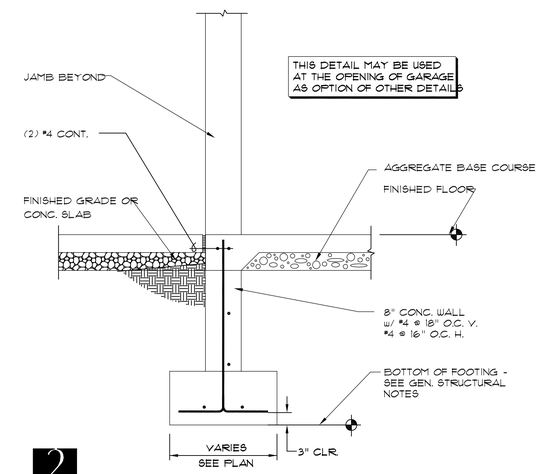

2

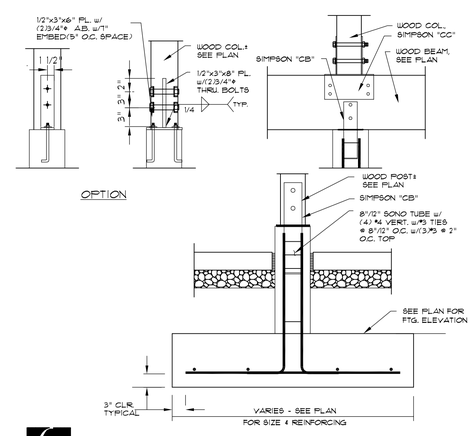

6

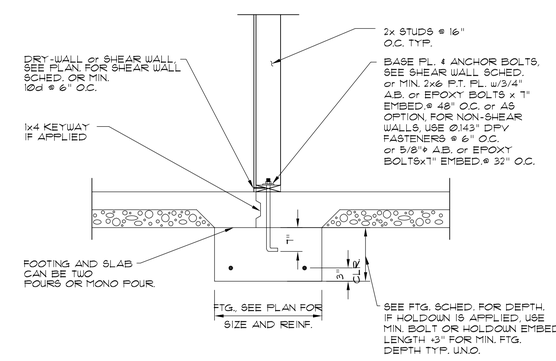

3

LICENSED PROFESSIONAL ENGINEER
No. 7600129
HUA SHEN
EXP. 3/31/27
STATE OF UTAH

5/28/2025

GEURTLER ADU

685 EAST 1825 SOUTH
BOUNTIFUL, UTAH

No.	Date	Issue Notes

Project ID SE25-0066

Scale

Drawing No.

Project Manager

Drawn By

Reviewed By

Date

CAD File Name

Design Firm: KP2 ARCHITECTS
1234 S. 300 E.
SALT LAKE CITY, UTAH 84105

Consultant: Shen Engineers, Inc.
Structural/Seismic Consultant

Project Title: GEURTLER ADU
685 EAST 1825 SOUTH
BOUNTIFUL, UTAH

Sheet Title

Scale

Sheet No.

S3.1

AutoCAD Version: 13_c4
April 08, 1998 2:28:37 p.m.
Drawing: C:\R13\DWG\PROTOS\D13.DWG (R4S)

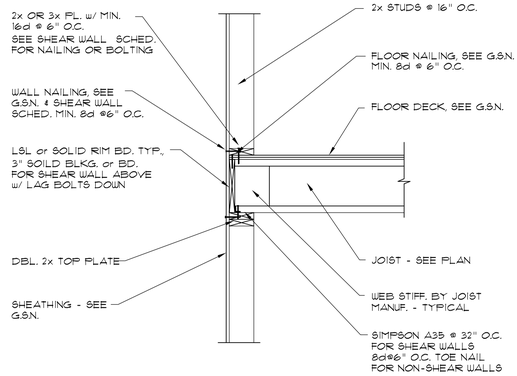

10

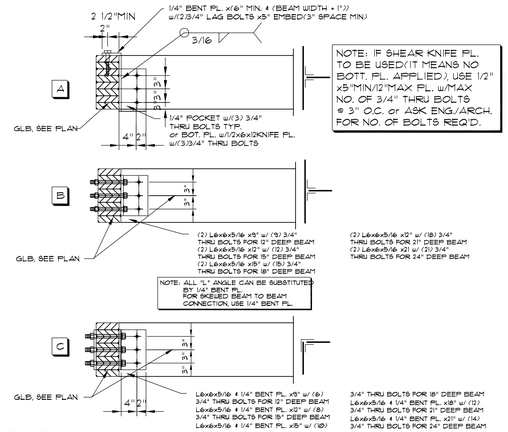

7

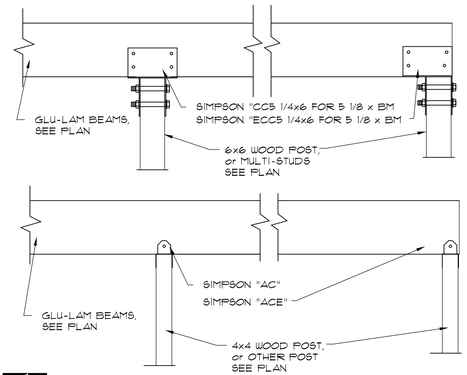

1 TYP. BEAM TO WOOD POST CONN.

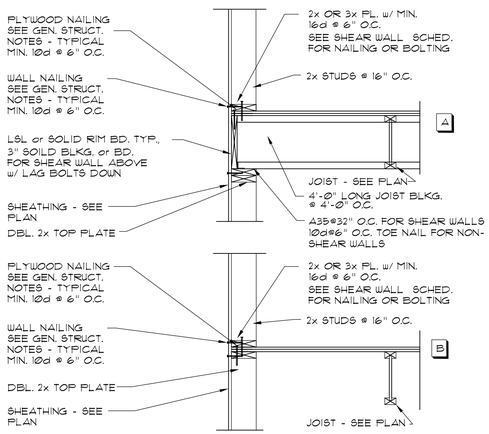

11

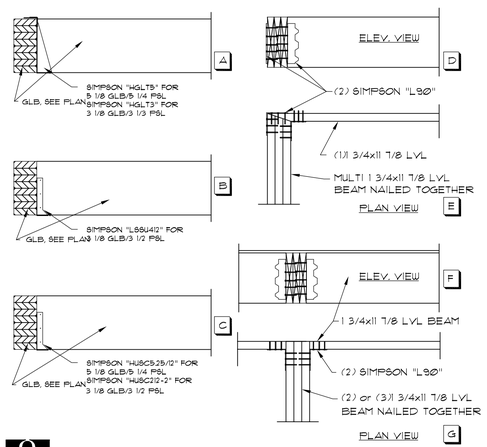

8

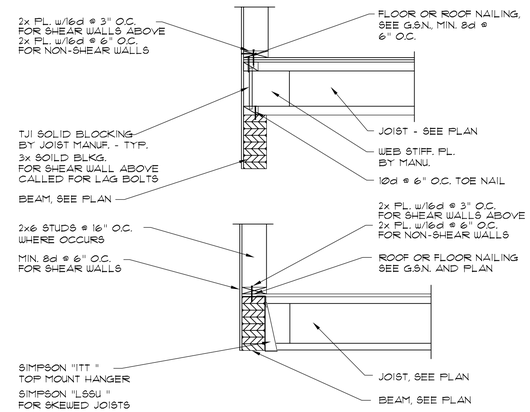

2

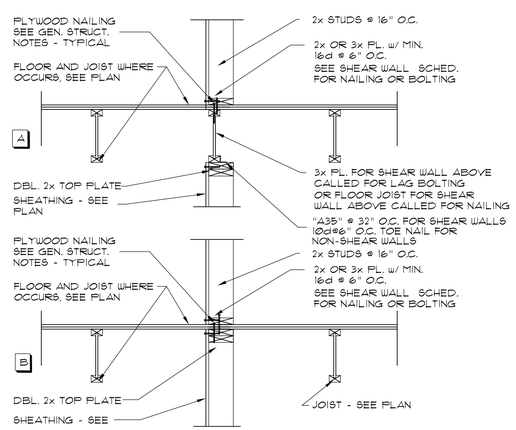

12

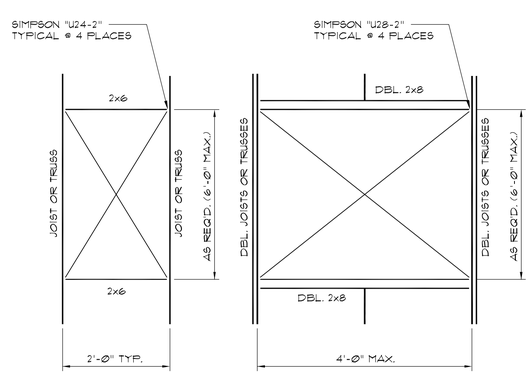

NOTE: FOR THE OPENINGS BIGGER THAN 4'-0", INFORM ARCH/ENGINEER

9 TYPICAL OPENING FRAMING

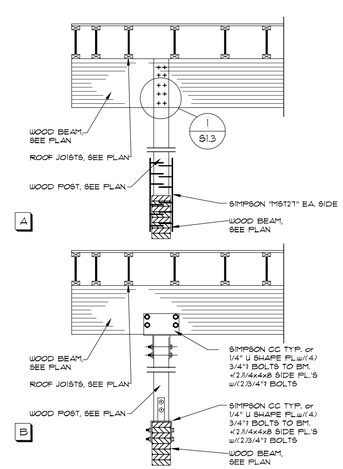

6

LICENSED PROFESSIONAL ENGINEER
No. 7601129
HUA SHEN
EXP. 3/31/23
STATE OF UTAH
5/28/2025

GEURTLER ADU
685 EAST 1825 SOUTH
BOUNTIFUL, UTAH

No.	Date	Issue Notes

Project ID SE15066
Scale
Drawing No.
Project Manager
Drawn By
Reviewed By
Date
CAD File Name
KP2 ARCHITECTS
1234 S. 300 E.
SALT LAKE CITY, UTAH 84105
Consultant
Shen Engineers, Inc.
Structural/Seismic Consultants
4875 S. Pontiac St.
Murray, UT 84123
Design Title
GEURTLER ADU
685 EAST 1825 SOUTH
BOUNTIFUL, UTAH
Sheet Title
Project Title
Scale
Sheet No.
S4.1

AutoCAD Version: 13.s4
April 08, 1998 3:28:37 p.m.
Drawing: C:\R13\COM\PROTOS\P12.DWG (R.0)

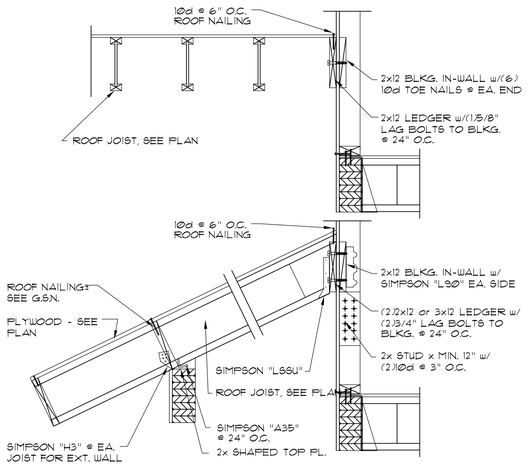

10

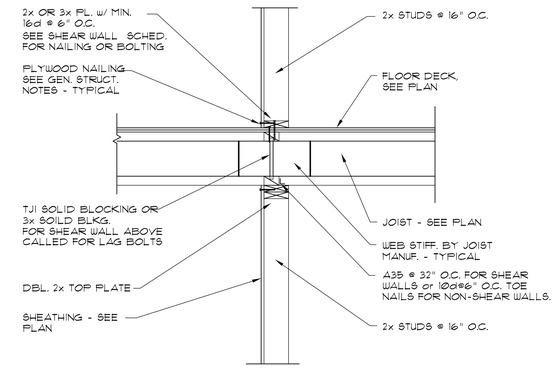

1

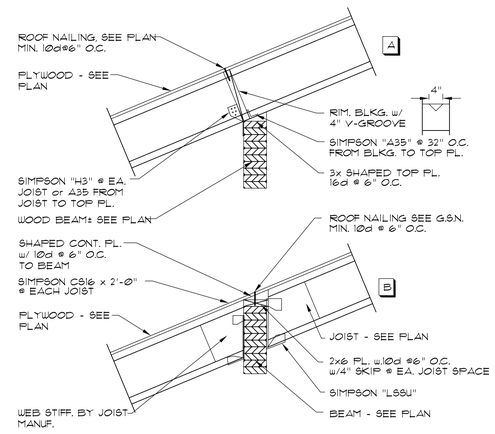

5

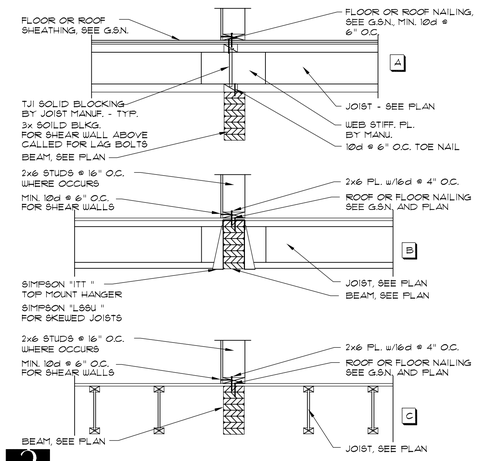

2

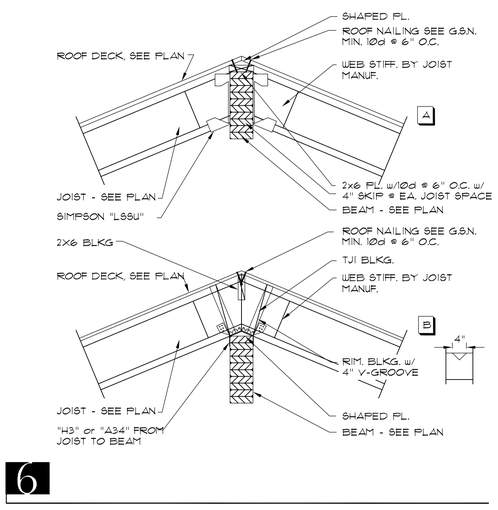

6

LICENSED PROFESSIONAL ENGINEER
No. 7601129
HUA SHEN
EXP. 3/31/27
STATE OF UTAH
5/28/2025

GEURTLER ADU
685 EAST 1825 SOUTH
BOUNTIFUL, UTAH

No.	Date	Issue Notes

Project ID: SE13-0036
Project Manager
Scale
Drawn By
Drawing No.
Reviewed By
Date
CAD File Name

Design Firm
KF2 ARCHITECTS
1234 S. 500 E.
SALT LAKE CITY, UTAH 84105

Consultant
Shen Engineers, Inc.
Structural/Seismic Consultants
4871 S. Fortune Rd.
Millcreek, UT 84124

Project Title
GEURTLER ADU
685 EAST 1825 SOUTH
BOUNTIFUL, UTAH

Sheet Title

Scale

Sheet No.
S4.2

AutoCAD Version: 13_c4
April 08, 1998 3:25:37 pm
Drawing: G:\PROJECTS\PROJECTS\2012.DWG (R.K2)

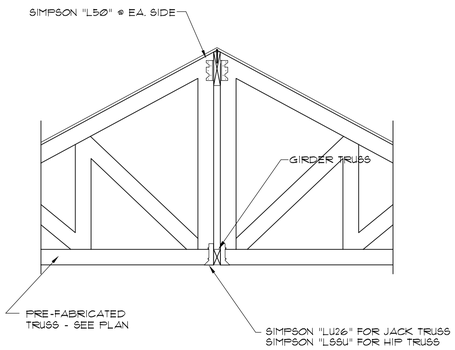

10

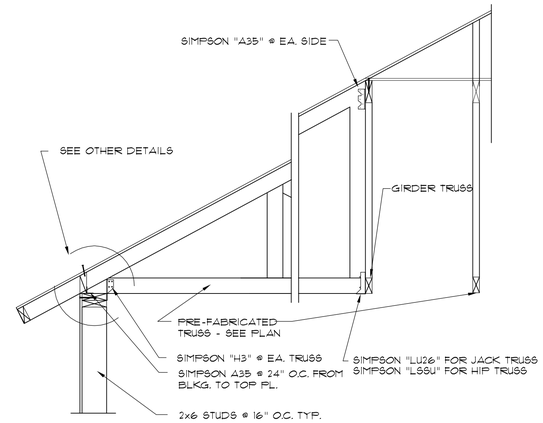

4

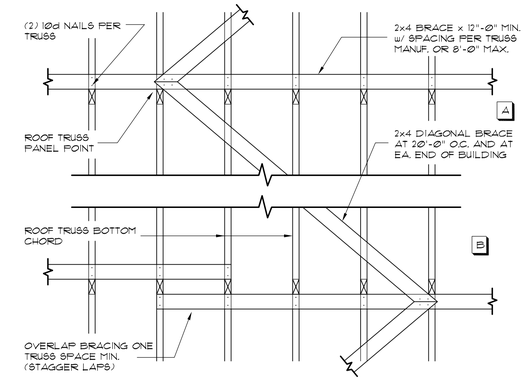

1 TYP. ROOF TRUSS BRACING (PLAN)

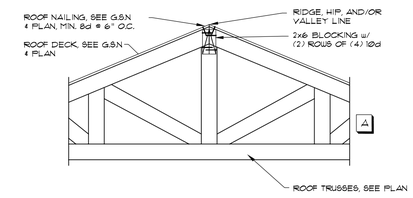

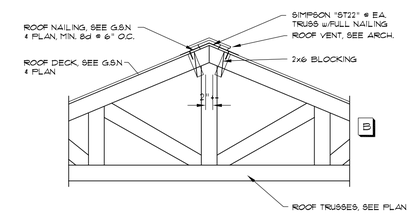

2 TYPICAL ROOF RIDGE AND HIP DETAILS

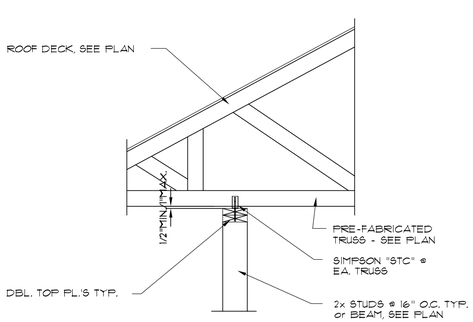

12 TRUSS TO NON-BRG. WALL CONNECTION

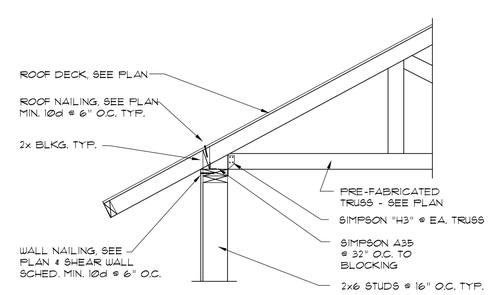

3

LICENSED PROFESSIONAL ENGINEER
No. 260129
HUA SHEN
EXP. 3/31/27
STATE OF UTAH
5/28/2025

GEURTLER ADU
685 EAST 1825 SOUTH
BOUNTIFUL, UTAH

No.	Date	Issue Notes

Project # SEB5086

Project Manager | Scale
Drawn By | Drawing No.
Reviewed By
Date
CAD File Name

Design Firm
KP2 ARCHITECTS
1234 S. 300 E.
SALT LAKE CITY, UTAH 84105

Consultant
Shen Engineers, Inc.
Structural/Seismic Consultants
4571 s. Fortuna way
Millcreek, UT 84124

Project Title
GEURTLER ADU
685 EAST 1825 SOUTH
BOUNTIFUL, UTAH

Sheet Title

Scale

Sheet No.
S4.3

AutoCAD Version: 15.3 #
Jun 26, 1998 - 2:35:37 p.m.
Drawing: C:\R13\COM\PROTOS\012.DWG (RJG)

GENERAL NOTES

1. The General Contractor (GC) shall reference CON-STD-10159, "Tower Modification Construction Specifications", as a continuation of the following General Notes. The GC shall keep a printed or electronic copy of this document with the Structural Design Drawings (SDD) at all times, in a location accessible to all Contractor Personnel, and shall ensure that all Contractor Personnel are aware of the information enclosed within the General Notes and CON-STD-10159.
2. The Contract Documents are the property of Crown Castle (Crown). They are provided to the GC and its Lower Tier Contractors and material suppliers for the limited purpose of use in completing the Work for this Site, and shall be kept in strict confidence and not disclosed to any third parties. The Contract Documents shall not be used for any other purpose whatsoever without the prior written consent of Crown.
3. Detail drawings, including notes and tables, shall govern over general notes and typical details. Contact the Crown Point of Contact (POC) and Engineer of Record (EOR) for clarification as needed.
4. Do not scale drawings.
5. Any Work performed without a prefabrication mapping is done at the risk of the GC and/or fabricator. All dimensions of existing structural elements are assumed based on the available documentation and are preliminary until field-verified by the GC, unless noted otherwise (UNO). Where discrepancies are found, GC shall contact the Crown POC and EOR through RFI.
6. For this analysis and modification, the tower has been assumed to be in good condition without any structural defects, UNO. If the GC discovers any indication of an existing structural defect, contact the Crown POC and EOR immediately.
7. All construction means and methods, including but not limited to erection plans, rigging plans, climbing plans, and rescue plans, shall be the responsibility of the GC responsible for the execution of the Work contained herein, and shall meet ANSI/ASSE A10.48 (latest edition); federal, state, and local regulations; and any applicable industry consensus standards related to the construction activities being performed. All rigging plans shall adhere to ANSI/ASSE A10.48 (latest edition) and Crown standard CED-STD-10253, "Rigging Program", including the required involvement of a qualified engineer for class IV construction to certify the supporting structure(s) in accordance with the ANSI/TIA-322 (latest edition).
8. The structural integrity of the modification design extends to the complete condition only. The GC must be cognizant that the removal of any structural component of an existing tower has the potential to cause the partial or complete collapse of the structure. All necessary precautions must be taken to ensure structural integrity, including, but not limited to, engineering assessment of construction stresses with installation maximum wind speed and/or temporary bracing and shoring.
9. Aerial and underground utilities and facilities may or may not be shown on the drawings. The GC shall take every precaution to preserve and protect these items, which may include aerial or underground power lines, telephone lines, water lines, sewer lines, cable television facilities, pipelines, structures and other public and private improvements within or adjacent to the Work area. The responsibility for determining the actual on-site location of these items shall rest exclusively with the GC.
10. All manufacturer's hardware assembly instructions shall be followed, UNO. Conflicting notes shall be brought to the attention of the EOR and the Crown POC.
11. The GC shall fabricate all required items per the materials specified below, UNO on the detail drawing sheets. If the GC finds for any component that the materials have not been clearly specified, the GC shall submit an RFI to the EOR to confirm the required material.

All structural elements shall be new and shall conform to the following requirements, UNO:

Monopoles:

- Structural shapes and plates: ASTM A572 Grade 65 (FY = 65 KSI)
- Welding electrodes, SMAW: E80XX
- Welding electrodes, FCAW: E8XT-XX
- Welding electrodes, GMAW: ER80S-X

Self-Support and Guyed Towers:

- Structural shapes and plates: ASTM A572 Grade 50 (FY = 50 KSI)
- Welding electrodes, SMAW: E70XX
- Welding electrodes, FCAW: E7XT-XX
- Welding electrodes, GMAW: ER70S-X

All tower types:

- Steel angle: ASTM A572 Grade 50 (FY = 50 KSI)
- Solid rod: ASTM A36 (FY = 36 KSI)
- Pipe/tube (round): ASTM A500 Grade C (FY = 50 KSI)
- Pipe/tube (square): ASTM A500 Grade C (FY = 50 KSI)
- Bolts: ASTM F3125 Grade A325 Type 1
- U-bolts: ASTM A307 Grade A, or SAE J429 Grade 2
- Nuts: ASTM A563 Grade DH
- Washers: ASTM F436 Type 1
- Guy Wires: ASTM A475 Grade EHS
- Bridge Strand: ASTM A586 Grade 1

12. After fabrication, hot-dip galvanize all steel items, UNO. Galvanize per ASTM A123, ASTM A153/A153M, or ASTM A653 G90, as applicable. ASTM A490 bolts shall not be hot-dip galvanized, but shall instead be coated with Magni 565 or EOR approved equivalent, per ASTM F2833.
13. Contractor Personnel shall not drill holes in any new or existing structural members, other than those drilled holes shown on structural drawings, without the approval of the EOR.
14. For a list of Crown-approved cold galvanizing compounds, refer to CON-STD-10149, "Tower Protective Coatings Guidelines".
15. All exposed structural steel as the result of this scope of Work including welds (after final inspection of the weld by the CWI), field drilled holes, and shaft interiors (where accessible), shall be cleaned and two (2) coats cold galvanizing shall be applied by brush in accordance with CON-STD-10149, "Tower Protective Coatings Guidelines". Photo documentation is required to be submitted to the MI Inspector.
16. If removal of existing modifications is required per the modification scope, the GC shall clean and cold galvanize any existing empty bolt holes, UNO. If additional unexpected, oversized, or slotted holes are found, the GC shall contact the EOR and Crown POC for guidance prior to proceeding with the modifications.
17. All Work involving base plate grout scope items or resulting in disturbance of base plate grout shall reference ENG-STD-10323, "Base Plate Grout", and shall follow any Base Plate Grout Removal Notes contained herein.
18. If scope of modification involves bark removal or installation, the GC shall reference CED-SOW-10265, "Tree Concealment for Monopoles", as well as CED-STD-10395, "Installation Guidelines for Bark Surfaces".
19. If scope of modification involves concealment components including branching, the GC shall reference CED-CAT-10398 "Monopole Concealed Decorative Structures (CDS) Approved Components". All new branch installations require tethering.
20. If scope of modification involves cathodic protection, the GC shall reference CED-SOW-10397, "Cathodic Protection Installation, Replacement, and Enhancement".
21. All tower grounding affected by the Work shall be repaired or replaced in accordance with OPS-STD-10090, "Tower Grounding", and OPS-BUL-10133, "Grounding Repair Recommendation".
22. If scope of modification requires removal or covering of tower ID tag, the tag must be replaced.
23. Any hardware removed from the existing tower shall be replaced with new hardware of equal size and quality, UNO. No existing fasteners shall be reused.
24. All joints using ASTM A325 or A490 bolts, U-bolts, V-bolts, and threaded rods shall be snug tightened, UNO.
25. A nut locking device shall be installed on all proposed and/or replaced snug tightened ASTM A325 or A490 bolts, U-bolts, V-bolts, and threaded rods.
26. All joints are bearing type connections UNO. If no bolt length is given in the Bill of Materials, the connection may include threads in the shear planes, and the GC is responsible for sizing the length of the bolt.
27. Blind bolts shall be installed per the installation specifications on the corresponding Approved Fastener sheets contained in CON-CAT-10300, "Monopole Standard Drawings and Approved Reinforcement Components".
28. If ASTM A325 or A490 bolts, and/or threaded rods are specified to be pre-tensioned, these shall be installed and tightened to the pretensioned condition according to the requirements of the RCSC Specification for Structural Joints Using ASTM High Strength Bolts.
29. All proposed and/or replaced bolts shall be of sufficient length such that the end of the bolt be at least flush with the face of the nut. It is not permitted for the bolt end to be below the face of the nut after tightening is completed.

NO.	DATE	DESCRIPTION	BY

REVISIONS

PROFESSIONAL ENGINEER
No. 9832916
MAGED ABDEL-MESSIH
STATE OF UTAH
Maged Abdel Messih

CROWN CASTLE

THIS DRAWING IS COPYRIGHTED AND IS THE SOLE PROPERTY OF CROWN CASTLE. IT IS PRODUCED SOLELY FOR USE BY CROWN CASTLE AND ITS AFFILIATES. REPRODUCTION OR USE OF THIS DRAWING AND/OR THE INFORMATION CONTAINED IN IT IS PROHIBITED WITHOUT THE WRITTEN PERMISSION OF CROWN CASTLE.

SITE NAME: SOUTH DAVIS
BU NUMBER: 845598
WO NUMBER: 2358934
SITE ADDRESS:
120 WEST 1000 NORTH
BOUNTIFUL, UT 84010
DAVIS COUNTY, USA

ENG/QA BY: DBS DATE: 01/24/25
DFT BY: EJB DATE: 01/27/25
DFT/QA BY: EJB DATE: 01/27/25
APRV'D BY: DBS DATE: 01/27/25
SCALE: N.T.S.

NOTES

S-3 REV. 0

Administrative Committee
Staff Report

Subject: Conditional Use Permit for a Cell Tower at 120 West 1000 North
Authors: Rachel Coleman, Planning Technician
Date: October 27, 2025

Background
On August 4, 2025, the Administrative Committee reviewed a Conditional Use Permit (CUP) application for a proposed cell tower. The applicant, Chyna Gudgel with AT&T, requested approval to increase the height of the existing north cell tower located at 120 West 1000 North. The tower sits on property owned by the Davis County School District within the Single-Family Residential (R-4) subzone. Because the tower is not located on Bountiful City property, it is considered a conditional use and requires CUP approval.

The Committee voted, on August 4, 2025, to continue the review to a future meeting because there was not enough information to confirm whether the tower could support two additional companies and be built to hold equipment for three companies total, as required by Bountiful City Land Use Code Section 14-14-118 (*See Attachment 10*).

The applicant provided new information that confirmed that the existing tower has the structural capacity for co-locating additional customers (See Attachment 1-3). The proposed tower design includes one active customer being moved from 75 feet to 100 feet (see Attachments 4-7). A structural analysis shows the tower is operating at only 38.3% of its capacity, indicating it has ample strength to support additional users *(See Attachment 1*).

Analysis
Staff has reviewed the submitted application, including the new findings, and determines that the proposed height increase of the existing north cell tower may be approved, provided that reasonable conditions are applied to mitigate any anticipated detrimental effects. This determination is based on the standards outlined in Bountiful City Land Use Code §14-14-118, which governs telecommunication facilities.

The applicant is proposing an 11.1-foot height increase to the existing north cell tower (See Attachments 13-22). Since the tower is already in place, code compliance focuses on whether the increased height remains unobtrusive in the residential area. The applicant has addressed this by responding to questions about compatibility with surrounding properties and how potential impacts will be mitigated (*See Attachment 8*).

The proposed cell tower upgrade will not require any modifications that would be obstructive to surrounding properties. The tower is positioned far enough from property lines to ensure that any

new visual, environmental, or operational impacts are minimal and consistent with the current use (*see Attachments 8 and 9*). To reduce the visual impact of the utility equipment and service areas, and to enhance safety at the base of the tower, it is recommended that screening and lighting be installed in accordance with the requirements listed below.

The project is limited to a tower height extension with no ground disturbance or new equipment. No conflicts with surrounding properties are expected. All work is to comply with land use codes, building standards, and local regulations, with minimal disruption (*see Attachment 8*).

Significant Impacts
There are no anticipated significant impacts to the neighboring properties.

Recommendation
Staff recommends that the Administrative Committee review the submitted application, hold a public hearing and approve the requested Conditional Use Permit to increase the height of the existing north cell tower located at 120 West 1000 North, subject to the following conditions of approval:

1. Screening shall be added along the existing fence at the base of the cell tower, as required by Bountiful City Land Use Code §14-15-104(D) (1-2).
2. Security lighting shall be installed for service and screened areas, in compliance with the Bountiful City Land Use Code 14-15-104(D) (3).
3. The Conditional Use Permit is site-specific and non-transferable.

Attachments

1. Colocation letter-signed
2-3. Colocation needs correction sent 8.11.25
4-6. Email correspondence August-October
7. Diagram of colocations and email correspondence
8. Response to Planning Questions
9. Site Plan
10-12. Statement of Intent
13-22. Permit Plans

120 West 1000 North

Photo submitted by applicant

Photo taken by staff on 7.23.25

Photo taken by staff on 7.23.25

Sudarshan Kasera, P.E.
Senior Project Engineer
Tower Assets
Tel: 724-416-2456
Sudarshan.Kasera@crowncastle.com

Crown Castle
2000 Corporate Drive
Canonsburg, PA 15317

Approved by Planning Department
Rachel Coleman, Planning Technician
10/02/2025 1:29:07 PM

September 30, 2025

Rachel Coleman
Bountiful City Building Department
795 South Main Street
Bountiful, UT 84010

Subject: **Response to Plan Review Comment**

Crown Castle Designation:

Crown Castle BU Number:	845598
Crown Castle Site Name:	SOUTH DAVIS
Crown Castle Work Order Number:	2358934
Crown Castle Order Number:	668928

Site Data:
120 West 1000 North, Bountiful, Davis County, UT 84010
Latitude 40° *54' 10.46"*, Longitude *-111° 52' 57.55"*
90.8 Foot Monopole with a Proposed 11 Foot Extension

Dear Rachel Coleman,

This letter is to attest that the tower structure operated by Crown Castle, located at the address referenced above, has the structural capacity for co-locating additional customers. The proposed configuration for the tower consists of a single active customer currently located at elevation 75' but proposed to be relocated to an elevation of 100'.

Based on the submitted structural analysis, the tower structure has a stress rating of 38.3% for the proposed configuration. Based on that capacity, the structure has significant reserve capacity for multiple additional customers.

Please contact the undersigned with any questions.

Sincerely,

Sudarshan Kasera, P.E.
Senior Project Engineer

PROFESSIONAL ENGINEER
No. 13043396-2202
SUDARSHAN
CHAKRADHARI
KASERA
STATE OF UTAH

Reviewed by Planning Department
Rachel Coleman, Planning Technician
08/11/2025 3:27:13 PM

See yellow box for red line comments.

See page 49 for corrections

Date: **January 28, 2025**

Crown Castle
2000 Corporate Drive
Canonsburg, PA 15317
(724) 416-2000

Subject:	**Structural Modification Report**	
Carrier Designation:	***AT&T Mobility* Co-Locate**	
	Site Number:	UTL03051
	Site Name:	SOUTH DAVIS
	FA Number:	10088279
Crown Castle Designation:	**BU Number:**	845598
	Site Name:	SOUTH DAVIS
	JDE Job Number:	2116827
	Work Order Number:	2358934
	Order Number:	668928 Rev. 3
Engineering Firm Designation:	**Crown Castle Project Number:**	2358934
Site Data:	**120 West 1000 North, Bountiful, Davis County, UT**	
	Latitude: *40° 54' 10.46"* Longitude: *-111° 52' 57.55"*	
	90.8 ft - Monopole Tower	

Crown Castle is pleased to submit this **"Structural Modification Report"** to determine the structural integrity of the above-mentioned tower.

The purpose of the analysis is to determine acceptability of the tower stress level including the proposed modifications as outlined in the attached drawings, "Appendix D". Based on our analysis we have determined the tower stress level for the structure and foundation, under the following load case, to be:

LC4: Modified Structure w/ Proposed Equipment Configuration **Sufficient Capacity**

This analysis has been performed in accordance with the 2021 International Building Code based upon an ultimate 3-second gust wind speed of 140 mph. Applicable Standard references and design criteria are listed in Section 2 – "Analysis Criteria".

Structural analysis prepared by: Drew Stephens

Respectfully submitted by:

PROFESSIONAL ENGINEER
No. 9832916
MAGED
ABDEL-MESSIH
STATE OF UTAH

Maged Abdel-Messih

Maged Abdel-Messih
Digitally signed by Maged Abdel-Messih
Date: 2025.01.31 14:43:33 -05'00'

Maged (Matthew) Abdel-Messih, P.E.
Senior Project Engineer

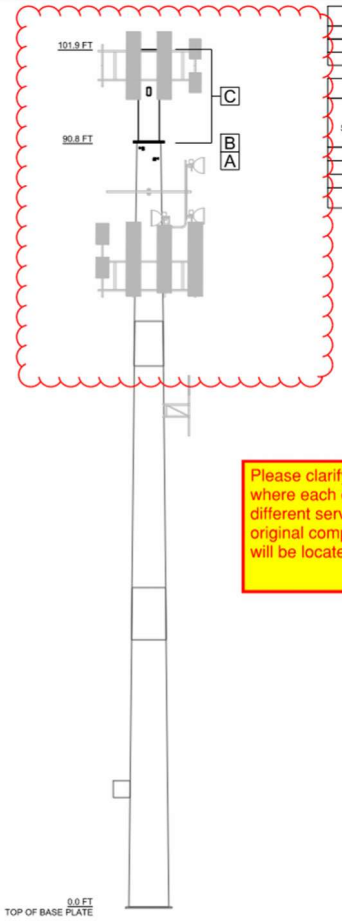

POLE ELEVATION

POLE SPECIFICATIONS

TOWER TAPER:	0.247781 IN/FT
BASE PL STEEL:	ASTM A572 GRADE 50 (50 KSI)
ANCHOR RODS:	1 1/4"Ø ASTM A687 GRADE 105

EXISTING SHAFT SECTION DATA

SHAFT SECTION	SECTION SHAPE	SECTION LENGTH (FT)	PLATE THICKNESS (IN)	SECTION GRADE (KSI)	FLANGE PLATE GRADE (KSI)	LAP SPLICE (IN)	DIAMETER ACROSS FLATS OR OF ROUND SECTION (IN)	
							@ TOP	@ BOTTOM
1	18-SIDED	26.50	0.3750	65	-	63 73	34.0300	42.5300
2	18-SIDED	37.76	0.3750	65	-		40.1057	49.6200
3	18-SIDED	37.86	0.3750	65	-		47.3305	56.7100

NOTE: DIMENSIONS SHOWN DO NOT INCLUDE GALVANIZING TOLERANCES

POLE MODIFICATION SCHEDULE

	ELEVATION (FT)	MODIFICATION	REFERENCE SHEET
A	89.0 - 90.8	**INSTALL NEW STEP BOLTS / CLIPS TO EXISTING TOWER AS REQUIRED**	S-6
B	90.8	**WELD NEW FLANGE PLATE TO TOP OF TOWER**	S-6
C	90.8 - 101.9	**INSTALL NEW TOWER EXTENSION**	S-6
D	N/A	**INSTALL NEW OBSTRUCTED CLIMBING FACILITIES SIGNAGE (PER CON-CAT-10300)**	N/A

PRIOR TO FABRICATION AND INSTALLATION, CONTRACTOR SHALL FIELD VERIFY ALL LENGTHS AND QUANTITIES GIVEN. LENGTH AND QUANTITIES PROVIDED ARE FOR QUOTING PURPOSES ONLY, AND SHALL NOT BE USED FOR FABRICATION.

FOR PARTS NOT DETAILED WITHIN THE DRAWING AND STARTING WITH "CCI-", SEE THE FOLLOWING CATALOG FOR DETAILS: CON-CAT-10300, MONOPOLE STANDARD DRAWINGS AND APPROVED REINFORCEMENT COMPONENTS

DESIGN LOADS

BASE SEISMIC SHEAR V_S= 12.498 kips

FOUNDATION LOADS

MOMENT = 1376.22 ft-kips
DOWN = 32.88 kips
SHEAR = 19.19 kips

SEISMIC DESIGN

EQUIVALENT LATERAL FORCE PROCEDURE
PER ASCE 7 SECTION 12.8.1

$I = 1$
$S_a = 1.360$
$S_s = 0.506$
SITE CLASS D
$S_{DS} = 1.088$
$S_{D1} = 0.605$
$V_S = 12.498$
$C_s = 0.456$
$R = 1.5$
SEISMIC DESIGN CATEGORY D
NON BUILDING STRUCTURE NOT SIMILAR TO BUILDING

Please clarify on diagram where each of the three different services (including the original company's equipment) will be located.

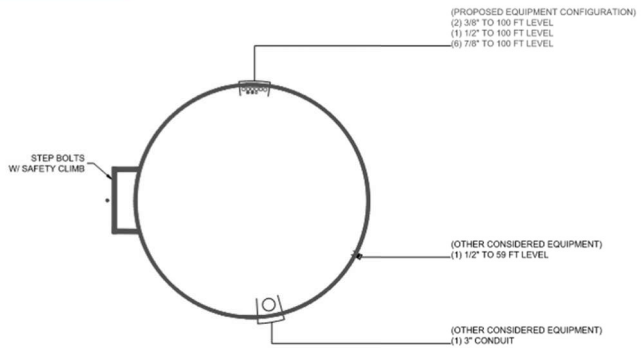

BASE LEVEL DRAWING

NO.	DATE	DESCRIPTION	BY

REVISIONS

CROWN CASTLE

THIS DRAWING IS COPYRIGHTED AND IS THE SOLE PROPERTY OF CROWN CASTLE. IT IS PRODUCED SOLELY FOR USE BY CROWN CASTLE AND ITS AFFILIATES. REPRODUCTION OR USE OF THIS DRAWING AND/OR THE INFORMATION CONTAINED IN IT IS FORBIDDEN WITHOUT THE WRITTEN PERMISSION OF CROWN CASTLE.

PROFESSIONAL ENGINEER
No. 9832916
MAGED ABDEL-MESSIH
STATE OF UTAH

Maged Abdel-Messih

Maged Abdel-Messih

Digitally signed by Maged Abdel-Messih
Date: 2025.01.31 14:53:36 -05'00'

SITE NAME: SOUTH DAVIS
BU NUMBER: 845598
WO NUMBER: 2358934
SITE ADDRESS:
120 WEST 1000 NORTH
BOUNTIFUL, UT 84010
DAVIS COUNTY, USA

ENG/QA BY: **DBS** DATE: **01/24/25**
DFT BY: **EJB** DATE: **01/27/25**
DFT/QA BY: **EJB** DATE: **01/27/25**
APRV'D BY: **DBS** DATE: **01/27/25**
SCALE: N.T.S.

POLE MODIFICATION SCHEDULE

S-5 REV 0

Email sent on 8/20/25

Hi Chyna,

I sent a message through the City Inspect portal for application PLANCUP25-027 120 West 1000 North. The Planning Department needs more clarification about the location of each of the three different services on the pole being modified (including the original company's equipment). See the attachment sent on 8/11/25 for the redline notes.

Thanks

Rachel Coleman

Planning Technician

See document" Colocations needs correction sent 8.11.25."

Email response on 8/21/25

Hello Rachel,

I've sent this to my team asking for this detail to provide. I'll get back to you as soon as I receive the response.

All the best,

Chyna

Email Sent on 8/26/25

Hi Chyna,

I sent some updates to the City Inspect application PLANCUP25-027 Conditional Use Permit 120 West 1000 North.

Respectfully,

Rachel Coleman

Bountiful City Planning Department

Email response 8/28/25

Great, thanks for the update.

All the best,

Chyna Gudgel

See document "Diagram of colocations and email correspondence."

Email sent 9.15.25

Hey Rachel,

To confirm this was only ran for 2 collocations, which is the only proposed collocations for the modification to the tower. I'm not seeing any additional comments in the portal outside of the structural related comments. Please let me know if we are missing anything else here.

All the best,

Chyna Gudgel

Email response 9.17.25

Chyna,

The purpose of my inquiry is to ensure compliance with §14-14-118(B)(2), which states: *"The tower shall be constructed in such a manner as to accommodate three (3) different services, meaning the original company's equipment and two colocations on the same tower."* From your reply, I gather that the current tower and the requested additional height will accommodate AT&T and Sigfox (two services).

Can you please confirm whether the tower can also accommodate a third service as required by code?

Respectfully,

Rachel Coleman

Email response 9/17/25

Hey Rachel,

Understood, I took this back to my team for confirmation.

All the best,

Chyna Gudgel (she/her)

Email sent 10/2/25

Hello Rachel,

Please see the attached from my engineer.

All the best,

Chyna Gudgel (she/her)

See document "845598_Future colocation letter-Signed_approved_RC"

Reviewed by Planning Department
Rachel Coleman, Planning Technician
08/25/2025 3:29:36 PM

See yellow box for red line comments.

The information received from applicant (see below) confirms that there will be only two (2) different co-locations on the proposed tower.

This does not comply with Bountiful City Land Use Code 14-14-118(B), which requires that a tower be built to accommodate three (3) different services—the original company's equipment plus two additional co-locations on the same tower.

On 8/25/25 Rachel Coleman sent the following to the applicant:

"Hi Chyna,

I got the diagram (*see diagram below*) you sent with the colocations. Once I receive an official response via email to the question below, I can proceed forward with adding this application to our Administrative Committee meeting on September 8, 2025: Does the diagram show that the proposed tower can accommodate three (3) different services meaning the original company's equipment and 2 colocations on the same tower?"

The applicant responded to question on 8/25/25 with the following:

"Per my structural engineer, the SA was ran with only 2 colocations, which are ATT at 100' and Sigfox at 59'. ATT is removing their loading at 75' and moving to 100'. There are no other carriers on this tower."

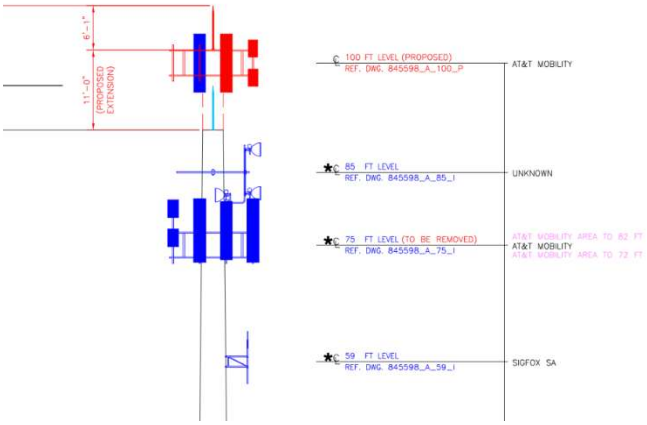

Reviewed by Planning Department
Rachel Coleman, Planning Technician
07/17/2025 4:53:20 PM

Response to Planning Questions

1. How does the proposed project fit with the surrounding properties and uses?

The proposed project involves a vertical extension of an existing monopole telecommunications tower located at 120 West 1000 North in Bountiful, Utah. The modification does not alter the tower's footprint or introduce any new ground-based infrastructure. The tower is already established in the area and serves a critical role in supporting wireless communication services. The height extension is designed to enhance service coverage and network reliability while maintaining compatibility with the existing land use and surrounding properties.

2. In what ways does the project not fit with the surrounding properties and uses?

There are no significant ways in which the proposed project does not fit with the surrounding properties and uses. The tower is an existing structure, and the proposed modification does not introduce any new visual, environmental, or operational impacts beyond the current use. The extension is minimal and consistent with the tower's original purpose and design.

3. What will you do to mitigate the potential conflicts with surrounding properties and uses?

Since the project involves only a height extension of an existing structure with no ground disturbance or new equipment installations, no conflicts with surrounding properties are anticipated. Nevertheless, all work will comply with applicable structural, safety, and zoning standards, including TIA-222-H and the 2021 IBC. The project will be executed with minimal disruption, and all construction activities will be coordinated to ensure public safety and compliance with local regulations.

Reviewed by Planning Department

Rachel Coleman, Planning Technician
07/17/2025 4:54:58 PM

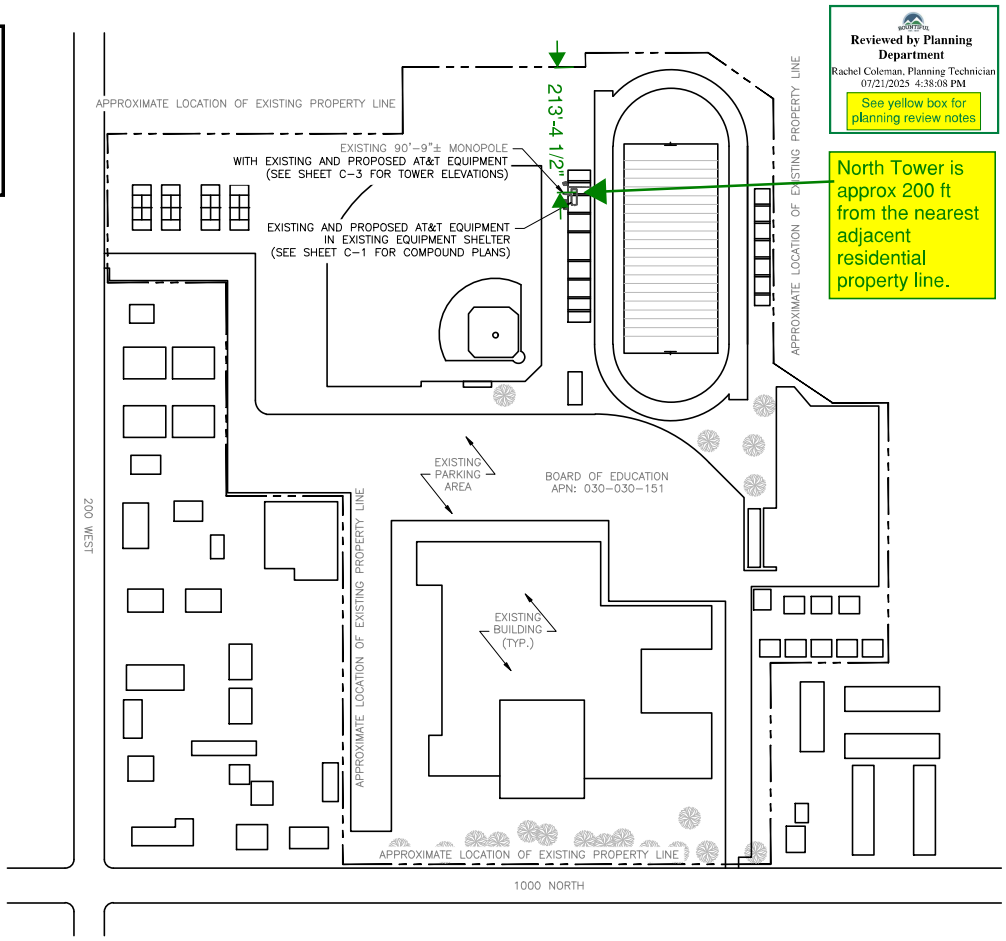

SITE PLAN
11"x17" SCALE: 1" = 200'
24"x36" SCALE: 1" = 100'

200' 100' 0 200'-0" 200' 400'

CROWN CASTLE

8020 Katy Freeway
Houston, TX 77024

Phone: (714) 794-4261
www.crowncastle.com

Reviewed by Planning Department
Rachel Coleman, Planning Technician
08/04/2025 4:19:03 PM
See yellow box for red line comments.

The Administrative Committee voted on 8/4/25 to postpone approval of the CUP application until all requirements are met. One outstanding issue relates to Bountiful City Land Use Code 14-14-118(B)(2):

The applicant must provide documentation showing that the tower was built to support three providers (the original company plus two co-locations). No record has been found confirming this requirement was met when the tower was first built.

Reviewed by Planning Department
Rachel Coleman, Planning Technician
07/17/2025 5:01:23 PM

June 30, 2025

CITY OF BOUNTIFUL, UT
PLANNING AND ZONING
790 SOUTH 100 EAST
BOUNTIFUL, UT 84010

Via Online Portal

************NOTICE OF ELIGIBLE FACILITIES REQUEST************

RE: Request for Minor Modification to Existing Wireless Facility – Section 6409
Site Address: 120 WEST 1000 NORTH, BOUNTIFUL, DAVIS County, UT 84010
Crown Site Number: 845598 / Crown Site Name: SOUTH DAVIS
Customer Site Number: UTL03051 / Application Number: 668928

On behalf of New Cingular Wireless PCS, LLC ("AT&T Mobility" or "Applicant"), Crown Castle USA Inc. ("Crown Castle") is pleased to submit this request to modify the existing wireless facility noted above through the collocation, replacement and/or removal of the Applicant's equipment as an eligible facilities request for a minor modification under Section 6409[1] and the rules of the Federal Communications Commission ("FCC").[2]

Section 6409 mandates that state and local governments must approve any eligible facilities request for the modification of an existing wireless tower or base station that does not substantially change the physical dimensions of such tower or base station. Under Section 6409, to toll the review period, if the reviewing authority determines that the application is incomplete, it must provide written notice to the applicant within 30 days, which clearly and specifically delineates all missing documents or information reasonably related to whether the request meets the federal requirements.[3] Additionally, if a state or local government, fails to issue any approvals required for this request within 60 days, these approvals are deemed granted. The FCC has clarified that the 30-day and 60-day deadlines begins when an applicant: (1) takes the first step required under state or local law; and (2) submits information sufficient to inform the jurisdiction that this modification qualifies under the federal law[4]. Please note that with the submission of this letter and enclosed items, the thirty and sixty-day review periods have started. **Based on the date of this filing, the deadline for written notice of incomplete application is July 30, 2025, and the deadline for issuance of approval is August 29, 2025.**

[1] Middle Class Tax Relief and Job Creation Act of 2012, Pub. L. No. 112-96, § 6409 (2012) (codified at 47 U.S.C. § 1455).
[2] *Acceleration of Broadband Deployment by Improving Wireless Facility Siting Policies*, 29 FCC Rcd. 12865 (2014) (codified at 47 CFR § 1.6100); and *Implementation of State & Local Governments' Obligation to Approve Certain Wireless Facility Modification Requests Under Section 6409(a) of the Spectrum Act of 2012*, WT Docket No. 19-250 (June 10, 2020).
[3] *See* 47 CFR § 1.6100 (c)(3). [4] *See* 2020 Upgrade Order at paragraph 16.

CROWN CASTLE

8020 Katy Freeway
Houston, TX 77024

Phone: (714) 794-4261
www.crowncastle.com

The proposed scope of work for this project includes:

Tower Extension Only - No equipment changes

At the end of this letter is a checklist outlining the applicable substantial change criteria under Section 6409. Additionally, the following items are included in support of this request:

- Construction Drawings
- Structural Analysis

As these documents indicate, (i) the modification involves the collocation, removal or replacement of transmission equipment; and (ii) such modification will not substantially change the physical dimensions of such tower or base station. As such, it is an "eligible facilities request" as defined in the FCC's rules to which the 60-day deadline for approval applies. Accordingly, Applicant requests all authorization necessary for this proposed minor modification under Section 6409.

Our goal is to work with you to obtain approvals earlier than the deadline. We will respond promptly to any request for related information you may have in connection with this request. Please let us know how we can work with you to expedite the approval process. We look forward to working with you on this important project, which will improve wireless telecommunication services in your community using collocation on existing infrastructure. If you have any questions, please do not hesitate to contact me.

Regards,

Chyna Gudgel

Chyna Gudgel
Permitting Specialist, Tower Services
Crown Castle, Agent for AT&T Mobility
(714) 794-4261
Chyna.Gudgel@crowncastle.com

CROWN CASTLE

8020 Katy Freeway
Houston, TX 77024

Phone: (714) 794-4261
www.crowncastle.com

Section 6409 Substantial Change Checklist for Towers Outside of the Public Right of Way

The Federal Communications Commission has determined that a modification substantially changes the physical dimension of a wireless tower or base station under 47 U.S.C. § 1455(a) if it meets one of six enumerated criteria under 47 C.F.R. § 1.6100.

Criteria for Towers Outside of the Public Rights of Way

YES/NO **NO**	Does the modification increase the height of the tower by more than the greater of: (a) 10%; or (b) the height of an additional antenna array plus separation of up to 20 feet from the top of the nearest existing antenna?
YES/NO **NO**	Does the modification add an appurtenance to the body of the tower that would protrude from the edge of the tower more than 20 feet or more than the width of the tower structure at the level of the appurtenance, whichever is greater?
YES/NO **NO**	Does the modification involve the installation of more than the standard number of new equipment cabinets for the technology involved or add more than four new equipment cabinets?
YES/NO **NO**	Does the modification entail any excavation or deployment outside the current site by more than 30 feet in any direction, not including any access or utility easements?
YES/NO **NO**	Does the modification defeat the concealment elements of the eligible support structure?
YES/NO **NO**	Does the modification violate conditions associated with the siting approval for the tower or base station other than as specified in 47 C.F.R. § 1.6100(c)(7)(i) – (iv)?

If all questions in the above section are answered "NO," then the modification does not constitute a substantial change to the existing tower under 47 C.F.R. § 1.6100.

CROWN CASTLE

TOWER MODIFICATION DRAWINGS

SITE NAME: SOUTH DAVIS
BU NUMBER: 845598

SITE ADDRESS:
120 WEST 1000 NORTH
BOUNTIFUL, UT 84010
DAVIS COUNTY, USA

PROJECT CONTACTS:

1. CROWN PROJECT MANAGER
   WESLEY POWER
   (678) 259-2265
   WESLEY.POWER@CROWNCASTLE.COM
   8000 AVALON BLVD, SUITE 700
   ALPHARETTA, GA 30009
2. CROWN DESIGN ENGINEER (EOR)
   MAGED (MATTHEW) ABDEL-MESSIH, P.E.
   (724) 416-2000
   EOR.APPROVAL@CROWNCASTLE.COM
   2000 CORPORATE DRIVE
   CANONSBURG, PA 15317

TOWER INFORMATION

TOWER MANUFACTURER / DOC #:	PIROD / CCISITES DOC # 4840324
TOWER HEIGHT / TYPE:	101.9 FT MONOPOLE TOWER
TOWER LOCATION:	LAT 40º 54' 10.46"
DATUM: (NAD 1983)	LONG -111º 52' 57.55"
	ELEV 4304 FT AMSL
STRUCTURAL DESIGN DRAWING:	CCI / WO # 2358934
STRUCTURAL ANALYSIS REPORT:	TEP / WO # 2308276
STRUCTURAL ANALYSIS DATE:	06/16/24
ORDER #:	668928 REV # 3
CCISITES DOCUMENT ID:	11511737

CODE COMPLIANCE

THIS MODIFICATION DESIGN IS BASED ON THE REQUIREMENTS OF THE TIA-222-H STRUCTURAL STANDARDS FOR STEEL ANTENNA TOWERS AND ANTENNA SUPPORTING STRUCTURES BASED UPON AN ULTIMATE 3-SECOND GUST WIND SPEED OF 140 MPH WITH NO ICE AS REQUIRED BY THE 2021 IBC, 60 MPH UNDER SERVICE LOADS, EXPOSURE CATEGORY B AND RISK CATEGORY II. SEISMIC FORCES WERE CONSIDERED BASED ON SPECTRAL RESPONSE FACTORS S_S=1.360 AND S_1=0.506.

See page 5 for notes on height extension

BOUNTIFUL
Reviewed by Planning Department
Rachel Coleman, Planning Technician
07/17/2025 5:00:14 PM
See yellow box for planning review notes

HOT WORK INCLUDED

N/A	BASE GRINDING ONLY
N/A	BASE WELDING (AND GRINDING)
N/A	AERIAL GRINDING ONLY
X	AERIAL WELDING (AND GRINDING)

ATTENTION ALL CONTRACTORS, ANYTIME YOU ACCESS A CROWN SITE FOR ANY REASON YOU ARE TO CALL THE CROWN NOC UPON ARRIVAL AND DEPARTURE, DAILY AT 800-788-7011

LOOK UP!

SAFETY CLIMB: 'LOOK UP'
THE INTEGRITY OF THE WIRE ROPE SAFETY CLIMB SYSTEM SHALL BE CONSIDERED DURING ALL STAGES OF DESIGN, INSTALLATION, AND INSPECTION. TOWER REINFORCEMENTS AND EQUIPMENT INSTALLATIONS SHALL NOT COMPROMISE THE INTEGRITY OR FUNCTIONAL USE OF ANY WIRE ROPE SAFETY CLIMB ON THE STRUCTURE. THIS SHALL INCLUDE, BUT NOT BE LIMITED TO: PINCHING OF THE WIRE ROPE, BENDING OF THE WIRE ROPE FROM ITS SUPPORTS, DIRECT CONTACT OR CLOSE PROXIMITY TO THE WIRE ROPE WHICH MAY CAUSE FRICTIONAL WEAR, OR IMPACT TO THE ANCHORAGE POINTS IN ANY WAY. ANY COMPROMISED SAFETY CLIMB MUST BE REPORTED TO YOUR CROWN POC FOR RESOLUTION, INCLUDING EXISTING CONDITIONS.

DRAWINGS INCLUDED

SHEET NUMBER	DESCRIPTION
S-1	TITLE PAGE
S-2	MODIFICATION INSPECTION CHECKLIST
S-3 & S-4	NOTES
S-5	POLE MODIFICATION SCHEDULE
S-6 - S-9	DETAILS
S-10	STANDARD PARTS

NO.	DATE	DESCRIPTION	BY

REVISIONS

PROFESSIONAL ENGINEER
No. 9832916
MAGED ABDEL-MESSIH
STATE OF UTAH
Maged Abdel-Messih

CROWN CASTLE

THIS DRAWING IS COPYRIGHTED AND IS THE SOLE PROPERTY OF CROWN CASTLE. IT IS PRODUCED SOLELY FOR USE BY CROWN CASTLE AND ITS AFFILIATES. REPRODUCTION OR USE OF THIS DRAWING AND/OR THE INFORMATION CONTAINED INIT IS PROHIBITED WITHOUT THE WRITTEN PERMISSION OF CROWN CASTLE.

SITE NAME: SOUTH DAVIS
BU NUMBER: 845598
WO NUMBER: 2358934
SITE ADDRESS:
120 WEST 1000 NORTH
BOUNTIFUL, UT 84010
DAVIS COUNTY, USA

ENG/QA BY: DBS	DATE: 01/24/25	
DFT BY: EJB	DATE: 01/27/25	
DFT/QA BY: EJB	DATE: 01/27/25	
APRV'D BY: DBS	DATE: 01/27/25	
SCALE: N.T.S.		

TITLE PAGE

S-1 REV 0

CON-FRM-10354 MI CHECKLIST

REQUIRED	REPORT ITEM	APPLICABLE CROWN DOC	BRIEF DESCRIPTION
PRE-CONSTRUCTION			
X	EOR APPROVED SHOP DRAWINGS	CON-SOW-10007	ONCE THE PRE-MODIFICATION MAPPING IS COMPLETE AND PRIOR TO FABRICATION, THE CONTRACTOR SHALL PROVIDE DETAILED ASSEMBLY DRAWINGS AND/OR SHOP DRAWINGS ALONG WITH EOR RFI FORM DETAILING ANY CHANGES FROM THE ORIGINAL DESIGN TO THE EOR FOR REVIEW AND APPROVAL.
X	FABRICATION INSPECTION	CON-SOW-10007	A LETTER FROM THE FABRICATOR, STATING THAT THE WORK WAS PERFORMED IN ACCORDANCE WITH INDUSTRY STANDARDS AND THE CONTRACT DOCUMENTS, SHALL BE PROVIDED TO THE MI INSPECTOR FOR INCLUSION IN THE MI REPORT.
X	FABRICATOR CERTIFIED WELD INSPECTION	CON-SOW-10007 CED-STD-10069	A CWI SHALL INSPECT ALL WELDING PERFORMED ON STRUCTURAL MEMBERS DURING FABRICATION. A WRITTEN REPORT SHALL BE PROVIDED TO THE MI INSPECTOR FOR INCLUSION IN THE MI REPORT.
X	MATERIAL TEST REPORTS (MTR)	CON-SOW-10007	MATERIAL TEST REPORTS SHALL BE PROVIDED FOR MATERIAL USED AS REQUIRED PER SECTION 9.2.5 OF CED-SOW-10007. MTRS SHALL BE PROVIDED TO THE MI INSPECTOR FOR INCLUSION IN THE MI REPORT.
X	FABRICATOR NDE INSPECTION REPORT	CED-SOW-10066 CED-STD-10069	CRITICAL SHOP WELDS THAT REQUIRE TESTING ARE NOTED ON THESE CONTRACT DRAWINGS. A CERTIFIED NDT INSPECTOR SHALL PERFORM NON-DESTRUCTIVE EXAMINATION AND A REPORT SHALL BE PROVIDED TO THE MI INSPECTOR FOR INCLUSION IN THE MI REPORT.
N/A	NDE OF MONOPOLE BASE PLATE	ENG-SOW-10033	A NDE OF THE POLE TO BASE PLATE CONNECTION IS REQUIRED AND A WRITTEN REPORT SHALL BE PROVIDED TO THE MI INSPECTOR FOR INCLUSION IN THE MI REPORT.
X	PACKING SLIPS	CON-SOW-10007	PACKING/SHIPPING LIST FOR ALL MATERIAL USED DURING CONSTRUCTION OF THE MODIFICATION
ADDITIONAL TESTING AND INSPECTIONS:			
N/A			
CONSTRUCTION			
N/A	FOUNDATION INSPECTIONS	CED-SOW-10144	A VISUAL OBSERVATION OF THE EXCAVATION AND REBAR SHALL BE PERFORMED BEFORE PLACING THE CONCRETE. A VISUAL OBSERVATION OF THE REBAR SHALL BE PERFORMED BEFORE PLACING THE EPOXY. A SEALED WRITTEN REPORT SHALL BE PROVIDED TO THE MI INSPECTOR FOR INCLUSION IN THE MI REPORT.
N/A	CONCRETE COMP. STRENGTH AND SLUMP TEST	CED-SOW-10144	THE CONCRETE MIX DESIGN, SLUMP TEST, AND COMPRESSIVE STRENGTH TESTS SHALL BE PROVIDED AS PART OF THE FOUNDATION REPORT.
N/A	EARTHWORK: SOIL COMPACTION	CED-SOW-10144	FOUNDATION SOIL COMPACTION SHALL BE INSPECTED AND APPROVED BY AN APPROVED FOUNDATION INSPECTOR AND RESULTS INCLUDED AS PART OF THE FOUNDATION REPORT.
N/A	EARTHWORK: BEARING CAPACITY	CED-SOW-10144	FOUNDATION SUB-GRADES SHALL BE INSPECTED AND APPROVED BY AN APPROVED FOUNDATION INSPECTOR AND RESULTS INCLUDED AS PART OF THE FOUNDATION REPORT.
N/A	MICROPILE/ROCK ANCHOR	CED-SOW-10144	MICROPILES/ROCK ANCHORS SHALL BE INSPECTED BY THE FOUNDATION INSPECTION VENDOR AND SHALL BE INCLUDED AS PART OF THE FOUNDATION INSPECTION REPORT. ADDITIONAL TESTING AND/OR INSPECTION REQUIREMENTS ARE NOTED IN THESE CONTRACT DOCUMENTS AND GENERAL NOTES PAGE TWO.
N/A	POST-INSTALLED ANCHOR ROD VERIFICATION	CON-SOW-10007 CON-FRM-10358	POST INSTALLED ANCHOR ROD VERIFICATION SHALL BE PERFORMED IN ACCORDANCE WITH CROWN REQUIREMENTS AND A REPORT SHALL BE PROVIDED TO THE MI INSPECTOR FOR INCLUSION IN THE MI REPORT.
N/A	BASE PLATE GROUT VERIFICATION	ENG-STD-10323	THE GENERAL CONTRACTOR SHALL PROVIDE DOCUMENTATION TO THE MI INSPECTOR THAT CERTIFIES THAT THE GROUT WAS REMOVED AND/OR INSTALLED IN ACCORDANCE WITH CROWN REQUIREMENTS FOR INCLUSION IN THE MI REPORT.
N/A	ELEPHANT ARMOR	OPS-SOW-10331	PHOTOS SHALL BE SUBMITTED IN ACCORDANCE WITH SECTION 6 FOR INCLUSION IN THE MI REPORT
X	FIELD CERTIFIED WELD INSPECTION	CED-SOW-10066 CED-STD-10069	A CROWN APPROVED CERTIFIED WELD INSPECTOR SHALL INSPECT AND TEST FIELD WELDS, FOLLOWING ALL PROCEDURES SPECIFIED IN CROWN STANDARD DOCUMENTS APPLICABLE TO WELD INSPECTIONS. A REPORT SHALL BE PROVIDED. NDE OF FIELD WELDS SHALL BE PERFORMED AS REQUIRED BY CROWN STANDARDS AND CONTRACT DOCUMENTS. THE NDE REPORT SHALL BE INCLUDED IN THE CWI REPORT.
N/A	FIELD NDE	CON-STD-10159 CON-SOW-10007	A NDE OF THE FIELD WELDS IN ACCORDANCE WITH CON-STD-10159 AND ANY ADDITIONAL NDE REQUIREMENTS NOTED IN THESE DESIGN DOCUMENTS
X	ON-SITE COLD GALVANIZING VERIFICATION	CON-STD-10149 CON-FRM-10358	THE GENERAL CONTRACTOR SHALL PROVIDE WRITTEN AND PHOTOGRAPHIC DOCUMENTATION TO THE MI INSPECTOR VERIFYING THAT ANY ON-SITE COLD GALVANIZING WAS APPLIED PER MANUFACTURER SPECIFICATIONS AND APPLICABLE STANDARDS.
N/A	TENSION TWIST AND PLUMB	CON-STD-10261	THE GENERAL CONTRACTOR SHALL PROVIDE A REPORT IN ACCORDANCE WITH APPLICABLE STANDARDS DOCUMENTING TENSION TWIST AND PLUMB.
N/A	TOWER PLUMB DELIVERABLES	CON-SOW-10007	THE CONTRACTOR SHALL PROVIDE WRITTEN AND PHOTOGRAPHIC DOCUMENTATION TO THE MI INSPECTOR VERIFYING THE TOWER PLUMB CONDITION SEE REQUIREMENTS ON GENERAL NOTES SHEET PAGE TWO
N/A	CANISTER DRAWINGS	CON-SOW-10007	THE CONTRACTOR SHALL SUBMIT A LEGIBLE COPY OF ANY FINAL FABRICATION OR PARTS DRAWINGS PROVIDED BY THE CANISTER VENDOR
X	GC AS-BUILT DRAWINGS	CON-SOW-10007	THE GENERAL CONTRACTOR SHALL SUBMIT A LEGIBLE COPY OF THE ORIGINAL DESIGN DRAWINGS EITHER STATING "INSTALLED AS DESIGNED" OR NOTING ANY CHANGES THAT WERE REQUIRED AND APPROVED BY THE ENGINEER OF RECORD, EOR/RFI FORMS APPROVING ALL CHANGES SHALL BE SUBMITTED
ADDITIONAL TESTING AND INSPECTIONS:			
X	NDE OF NEW FLANGE PLATE	ENG-SOW-10033	A NDE OF THE POLE TO NEW FLANGE PLATE CONNECTION IS REQUIRED AND A WRITTEN REPORT SHALL BE PROVIDED TO THE MI INSPECTOR FOR INCLUSION IN THE MI REPORT. REF DOC FOR BASE PLATES. GC TO USE GENERAL REQUIREMENTS AS IT APPLIES TO NEW FLANGE PLATES.
POST-CONSTRUCTION			
X	CONSTRUCTION COMPLIANCE LETTER	CON-SOW-10007 CON-FRM-10358	A LETTER FROM THE GENERAL CONTRACTOR STATING THAT THE WORKMANSHIP WAS PERFORMED IN ACCORDANCE WITH INDUSTRY STANDARDS AND THESE CONTRACT DRAWINGS
N/A	POST-INSTALLED ANCHOR ROD PULL TESTS	CED-PRC-10119	POST-INSTALLED ANCHOR RODS SHALL BE TESTED BY A CROWN APPROVED PULL TEST INSPECTOR AND A REPORT SHALL BE PROVIDED INDICATING TESTING RESULTS.
X	PHOTOGRAPHS	CON-SOW-10007	PHOTOGRAPHS SHALL BE SUBMITTED TO THE MI. PHOTOS SHALL DOCUMENT ALL PHASES OF THE CONSTRUCTION. THE PHOTOS SHALL BE ORGANIZED IN A MANNER THAT EASILY IDENTIFIES THE EXACT LOCATION OF THE PHOTO.
N/A	BOLT HOLE INSTALLATION VERIFICATION REPORT	CON-SOW-10007	THE MI INSPECTOR SHALL VERIFY THE HOLE SIZE AND CONDITION OF 10% OF ALL NON PRE-TENSIONED BOLTS INSTALLED AS PART OF THE MODIFICATION. THE MI REPORT SHALL CONTAIN THE COMPLETED BOLT INSTALLATION VERIFICATION REPORT, INCLUDING THE SUPPORTING PHOTOGRAPHS.
X	PUNCH LIST DEVELOPMENT AND CORRECTION DOCUMENTATION	CON-PRC-10283 CON-FRM-10285	FINAL PUNCH LIST INDICATING ALL NONCONFORMANCE(S) IDENTIFIED AND THE FINAL RESOLUTION/APPROVAL.
X	MI INSPECTOR RECORD DRAWING(S)	CON-SOW-10007	THE MI INSPECTOR SHALL OBSERVE AND REPORT ANY DISCREPANCIES BETWEEN THE CONTRACTOR'S REDLINE DRAWING AND THE ACTUAL COMPLETED INSTALLATION.
ADDITIONAL TESTING AND INSPECTIONS:			
N/A			

THE MI CHECKLIST SHALL BE REVIEWED PRIOR TO THE START OF CONSTRUCTION. ALL PARTIES TO THE MODIFICATION SHALL UNDERSTAND CROWN REQUIREMENTS AND INSPECTION/DOCUMENTATION THAT IS APPLICABLE TO THE SCOPE OF WORK THEY ARE PERFORMING. ERRORS ON THE MI CHECKLIST SHALL BE BROUGHT TO THE ATTENTION OF THE CROWN POC AND EOR AS SOON AS POSSIBLE.

MODIFICATION INSPECTION NOTES

GENERAL

THE MI IS AN ON-SITE VISUAL AND HANDS-ON INSPECTION OF TOWER MODIFICATIONS INCLUDING A REVIEW OF CONSTRUCTION REPORTS AND ADDITIONAL PERTINENT DOCUMENTATION PROVIDED BY THE GENERAL CONTRACTOR (GC), AS WELL AS ANY INSPECTION DOCUMENTS PROVIDED BY 3RD PARTY INSPECTORS. THE MI IS TO ENSURE THE INSTALLATION WAS CONSTRUCTED IN ACCORDANCE WITH THE CONTRACT DOCUMENTS, NAMELY THE MODIFICATION DRAWINGS, IN ACCORDANCE WITH APPLICABLE CROWN STANDARDS, AND AS DESIGNED BY THE ENGINEER OF RECORD (EOR).

NO DOCUMENT, CODE OR POLICY CAN ANTICIPATE EVERY SITUATION THAT MAY ARISE. ACCORDINGLY, THIS CHECKLIST IS INTENDED TO SERVE AS A SOURCE OF GUIDING PRINCIPLES IN ESTABLISHING GUIDELINES FOR MODIFICATION INSPECTION.

THE MI IS TO CONFIRM INSTALLATION CONFIGURATION AND WORKMANSHIP ONLY AND IS NOT A REVIEW OF THE MODIFICATION DESIGN ITSELF, AND THE MI INSPECTOR DOES NOT TAKE OWNERSHIP OF THE MODIFICATION DESIGN. OWNERSHIP OF THE STRUCTURAL MODIFICATION DESIGN EFFECTIVENESS AND INTEGRITY RESIDES WITH THE EOR AT ALL TIMES. THE MI INSPECTOR SHALL INSPECT AND NOTE CONFORMANCE/NONCONFORMANCE AND PROVIDE TO THE CROWN POINT OF CONTACT (CROWN POC) FOR EVALUATION.

TO ENSURE THAT THE REQUIREMENTS OF THE MI ARE MET, IT IS VITAL THAT THE GENERAL CONTRACTOR (GC) AND THE MI INSPECTOR BEGIN COMMUNICATING AND COORDINATING AS SOON AS A PURCHASE ORDER (PO) IS RECEIVED. IT IS EXPECTED THAT EACH PARTY WILL BE PROACTIVE IN REACHING OUT TO THE OTHER PARTY. IF CONTACT INFORMATION IS NOT KNOWN THE GC AND/OR INSPECTOR SHALL CONTACT THE CROWN POINT OF CONTACT (CROWN POC).

REFER TO CROWN CON-SOW-10007, "MODIFICATION INSPECTION", FOR FURTHER DETAILS AND REQUIREMENTS.

SERVICE LEVEL COMMITMENT

THE FOLLOWING RECOMMENDATIONS AND SUGGESTIONS ARE OFFERED TO ENHANCE THE EFFICIENCY AND EFFECTIVENESS OF DELIVERING AN MI REPORT.

- THE GC SHALL PROVIDE A MINIMUM OF 5 BUSINESS DAYS NOTICE, PREFERABLY 10, TO THE MI INSPECTOR AS TO WHEN THE SITE WILL BE READY FOR THE MI TO BE CONDUCTED.
- THE GC AND MI INSPECTOR COORDINATE CLOSELY THROUGHOUT THE ENTIRE PROJECT.
- WHEN POSSIBLE, IT IS PREFERRED TO HAVE THE GC AND MI INSPECTOR ON-SITE DURING THE MI TO HAVE ANY MINOR DEFICIENCIES CORRECTED DURING THE INITIAL MI. THEREFORE, THE GC MAY CHOOSE TO COORDINATE THE MI CAREFULLY TO ENSURE ALL CONSTRUCTION FACILITIES ARE AT THEIR DISPOSAL WHEN THE MI INSPECTOR IS ON SITE.

REQUIRED PHOTOS

BETWEEN THE GC AND THE MI INSPECTOR THE FOLLOWING PHOTOGRAPHS, AT A MINIMUM, ARE TO BE TAKEN AND INCLUDED IN THE MI REPORT:

- PRE-CONSTRUCTION GENERAL SITE CONDITION
- PHOTOGRAPHS DURING THE REINFORCEMENT MODIFICATION CONSTRUCTION/ERECTION AND INSPECTION
  - RAW MATERIALS
  - PHOTOS OF ALL CRITICAL DETAILS
  - FOUNDATION MODIFICATIONS
  - WELD PREPARATION
  - BOLT INSTALLATION
  - FINAL INSTALLED CONDITION
  - SURFACE COATING REPAIR
- POST CONSTRUCTION PHOTOGRAPHS
  - FINAL INFIELD CONDITION

PHOTOS OF ELEVATED MODIFICATIONS TAKEN ONLY FROM THE GROUND SHALL BE CONSIDERED INADEQUATE.

THIS IS NOT A COMPLETE LIST OF REQUIRED PHOTOS. FOR A COMPLETE LIST OF PHOTOS SEE CROWN DOCUMENT # CED-SOW-10007.

NO.	DATE	DESCRIPTION	BY

REVISIONS

PROFESSIONAL ENGINEER
No. 9832916
MAGED ABDEL-MESSIH
STATE OF UTAH
Maged Abdel-Messih

CROWN CASTLE

THIS DRAWING IS COPYRIGHTED AND IS THE SOLE PROPERTY OF CROWN CASTLE. IT IS PRODUCED SOLELY FOR USE BY CROWN CASTLE AND ITS AFFILIATES. REPRODUCTION OR USE OF THIS DRAWING AND/OR THE INFORMATION CONTAINED INIT IS PROHIBITED WITHOUT THE WRITTEN PERMISSION OF CROWN CASTLE.

SITE NAME: SOUTH DAVIS
BU NUMBER: 845598
WO NUMBER: 2358934
SITE ADDRESS:
120 WEST 1000 NORTH
BOUNTIFUL, UT 84010
DAVIS COUNTY, USA

ENG/QA BY: **DBS** DATE: **01/24/25**
DFT BY: **EJB** DATE: **01/27/25**
DFT/QA BY: **EJB** DATE: **01/27/25**
APRV'D BY: **DBS** DATE: **01/27/25**
SCALE: N.T.S.

MODIFICATION INSPECTION CHECKLIST

S-2 REV. 0

PORT HOLE NOTES

1. All surfaces of the port hole rim itself as well as all exterior structural steel areas affected by welding, including weld metal, shall be galvanized in accordance with ASTM A780.

2. The following criteria are required for adherence to this standard.
   A. Use rim as template for cutting hole in monopole. Care shall be taken to minimize the root opening (AWS tolerances allow a maximum of 0.19").
   B. Provide minimum 24" clear vertical separation between rim and other openings in monopole. Align ports on same azimuth as existing ports.
   C. Maximum variance of port hole center elevation shall not be greater than 6".
   D. Provide 90° minimum radial separation or two times the hole width clear circumferential separation between rim and adjacent opening in monopole, whichever is greatest. 18-sided pole with 4 ports shall not be allowed.
   E. Edge of opening for the exit port must be at least 24" from splice.
   F. Grind all edges of cut opening, achieving a bevel angle of 45° and removing the zinc from the weld area plus 1/4". Ensure all weld areas and surfaces are clean and free of zinc and loose particles. Zinc shall not be allowed to contaminate the weld.
   G. Position the rim as required and securely tack weld. Finish welding the rim with bevel weld and reinforcing fillet weld size as determined from the design method.
   H. Repair with galvanized coating. Both inside and outside should be brush-coated with 2 coats of zinc-rich paint. Apply in strict accordance with the manufacturer's recommendations. Paint over repaired surfaces to match monopole.

NO.	DATE	DESCRIPTION	BY

REVISIONS

PROFESSIONAL ENGINEER
No. 9832916
MAGED ABDEL-MESSIH
STATE OF UTAH

CROWN CASTLE

THIS DRAWING IS COPYRIGHTED AND IS THE SOLE PROPERTY OF CROWN CASTLE. IT IS PROVIDED SOLELY FOR USE BY CROWN CASTLE AND ITS AFFILIATES. REPRODUCTION OR USE OF THIS DRAWING AND/OR THE INFORMATION CONTAINED IN IT IS PROHIBITED WITHOUT THE WRITTEN PERMISSION OF CROWN CASTLE.

SITE NAME: SOUTH DAVIS
BU NUMBER: 845598
WO NUMBER: 2358934
SITE ADDRESS:
120 WEST 1000 NORTH
BOUNTIFUL, UT 84010
DAVIS COUNTY, USA

ENG/QA BY: DBS DATE: 01/24/25
DFT BY: EJB DATE: 01/27/25
DFT/QA BY: EJB DATE: 01/27/25
APRV'D BY: DBS DATE: 01/27/25
SCALE: N.T.S.

NOTES

S-4 REV 0

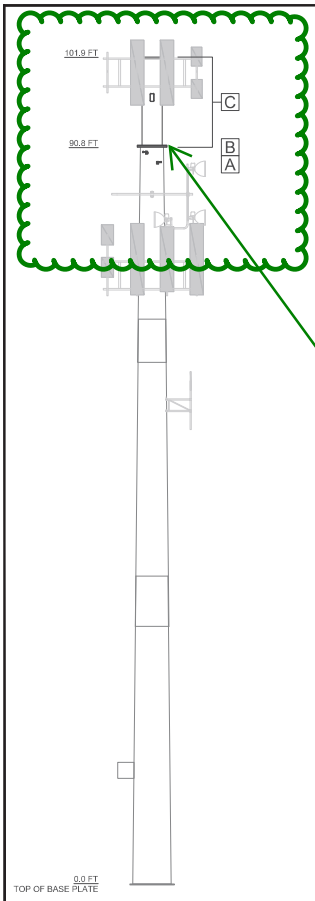

POLE ELEVATION

POLE SPECIFICATIONS

TOWER TAPER:	0.247781 IN/FT
BASE PL STEEL:	ASTM A572 GRADE 50 (50 KSI)
ANCHOR RODS:	1 1/4"Ø ASTM A687 GRADE 105

EXISTING SHAFT SECTION DATA

SHAFT SECTION	SECTION SHAPE	SECTION LENGTH (FT)	PLATE THICKNESS (IN)	SECTION GRADE (KSI)	FLANGE PLATE GRADE (KSI)	LAP SPLICE (IN)	DIAMETER ACROSS FLATS OR OF ROUND SECTION (IN)	
							@ TOP	@ BOTTOM
1	18-SIDED	26.50	0.3750	65	-	63 73	34.0300	42.5300
2	18-SIDED	37.76	0.3750	65	-		40.1057	49.6200
3	18-SIDED	37.86	0.3750	65	-		47.3305	56.7100

NOTE: DIMENSIONS SHOWN DO NOT INCLUDE GALVANIZING TOLERANCES

POLE MODIFICATION SCHEDULE

	ELEVATION (FT)	MODIFICATION	REFERENCE SHEET
A	89.0 - 90.8	**INSTALL NEW STEP BOLTS / CLIPS TO EXISTING TOWER AS REQUIRED**	S-6
B	90.8	**WELD NEW FLANGE PLATE TO TOP OF TOWER**	S-6
C	90.8 - 101.9	**INSTALL NEW TOWER EXTENSION**	S-6
D	N/A	**INSTALL NEW OBSTRUCTED CLIMBING FACILITIES SIGNAGE (PER CON-CAT-10300)**	N/A

PRIOR TO FABRICATION AND INSTALLATION, CONTRACTOR SHALL FIELD VERIFY ALL LENGTHS AND QUANTITIES GIVEN. LENGTH AND QUANTITIES PROVIDED ARE FOR QUOTING PURPOSES ONLY, AND SHALL NOT BE USED FOR FABRICATION.

FOR PARTS NOT DETAILED WITHIN THE DRAWING AND STARTING WITH "CCI-", SEE THE FOLLOWING CATALOG FOR DETAILS: CON-CAT-10300, MONOPOLE STANDARD DRAWINGS AND APPROVED REINFORCEMENT COMPONENTS

DESIGN LOADS

BASE SEISMIC SHEAR V_S= 12.498 kips

FOUNDATION LOADS

MOMENT = 1376.22 ft-kips
DOWN = 32.88 kips
SHEAR = 19.19 kips

SEISMIC DESIGN

EQUIVALENT LATERAL FORCE PROCEDURE
PER ASCE 7 SECTION 12.8.1

I = 1
S_S = 1.360
S_1 = 0.506
SITE CLASS D
S_{DS} = 1.088
S_{D1} = 0.605
V_S = 12.498
C_S = 0.456
R = 1.5
SEISMIC DESIGN CATEGORY D
NON BUILDING STRUCTURE NOT SIMILAR TO BUILDING

Proposed height extension 101.9 ft and existing height 90.8 ft.
Total height extension is 11.1 ft

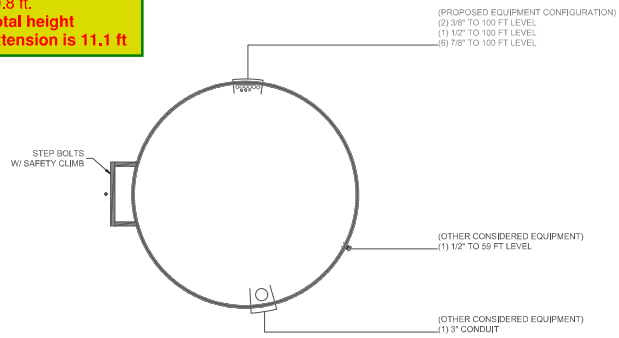

BASE LEVEL DRAWING

NO.	DATE	DESCRIPTION	BY

REVISIONS

PROFESSIONAL ENGINEER
No. 9832916
MAGED ABDEL-MESSIH
STATE OF UTAH
Maged Abdel-Messih

CROWN CASTLE

THIS DRAWING IS COPYRIGHTED AND IS THE SOLE PROPERTY OF CROWN CASTLE. IT IS PRODUCED SOLELY FOR USE BY CROWN CASTLE AND ITS AFFILIATES. REPRODUCTION OR USE OF THIS DRAWING AND/OR THE INFORMATION CONTAINED INIT IS PROHIBITED WITHOUT THE WRITTEN PERMISSION OF CROWN CASTLE.

SITE NAME: SOUTH DAVIS
BU NUMBER: 845598
WO NUMBER: 2358934
SITE ADDRESS:
120 WEST 1000 NORTH
BOUNTIFUL, UT 84010
DAVIS COUNTY, USA

ENG/QA BY: **DBS** DATE: **01/24/25**
DFT BY: **EJB** DATE: **01/27/25**
DFT/QA BY: **EJB** DATE: **01/27/25**
APRV'D BY: **DBS** DATE: **01/27/25**
SCALE: N.T.S.

POLE MODIFICATION SCHEDULE

S-5 REV 0

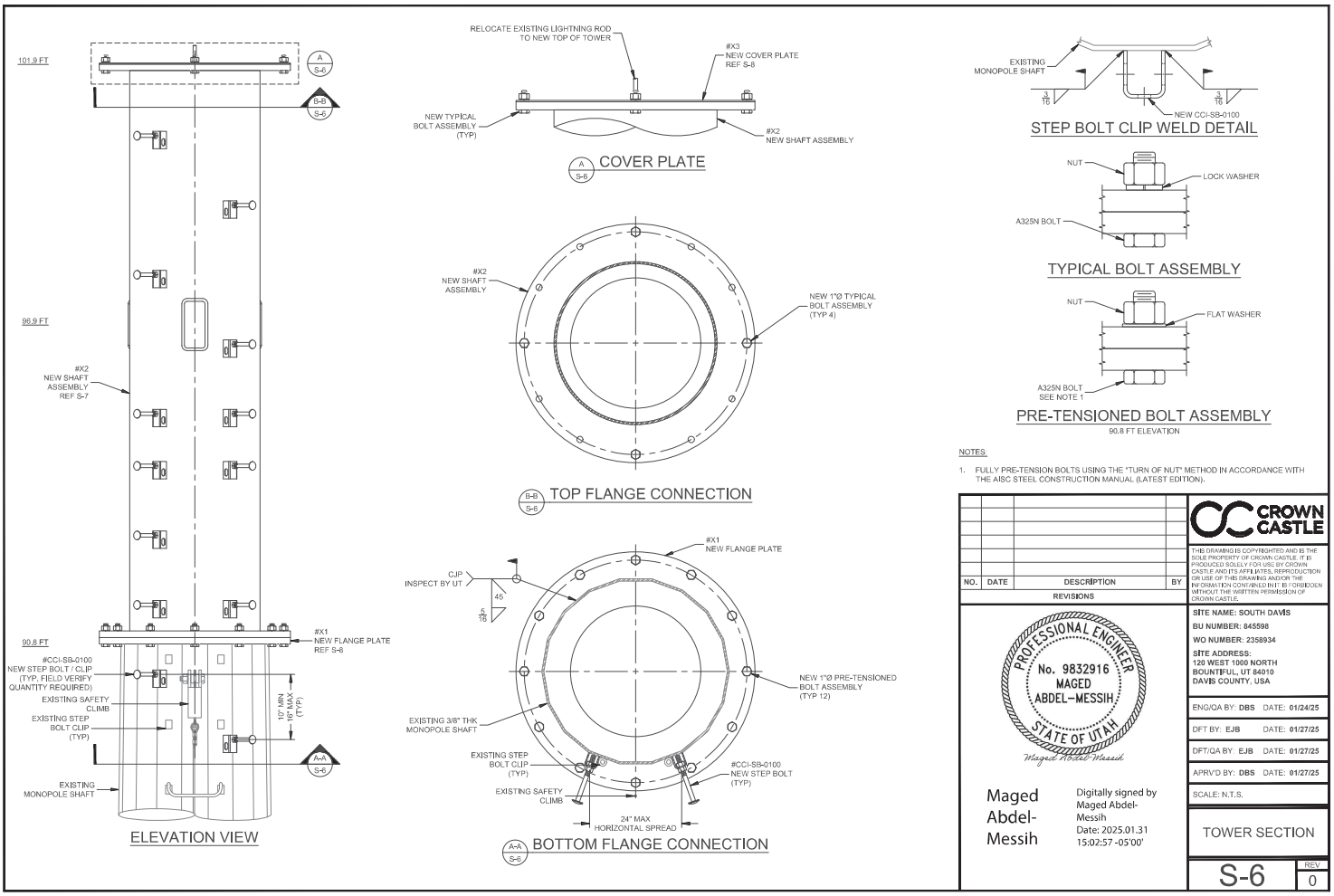
101.9 FT
96.9 FT
90.8 FT
#X2
NEW SHAFT
ASSEMBLY
REF S-7
#X1
NEW FLANGE PLATE
REF S-8
#CCI-SB-0100
NEW STEP BOLT / CLIP
(TYP, FIELD VERIFY
QUANTITY REQUIRED)
EXISTING SAFETY
CLIMB
EXISTING STEP
BOLT CLIP
(TYP)
10" MIN
18" MAX
(TYP)
EXISTING
MONOPOLE SHAFT
ELEVATION VIEW
RELOCATE EXISTING LIGHTNING ROD
TO NEW TOP OF TOWER
#X3
NEW COVER PLATE
REF S-8
NEW TYPICAL
BOLT ASSEMBLY
(TYP)
#X2
NEW SHAFT ASSEMBLY
COVER PLATE
#X2
NEW SHAFT
ASSEMBLY
NEW 1"Ø TYPICAL
BOLT ASSEMBLY
(TYP 4)
TOP FLANGE CONNECTION
#X1
NEW FLANGE PLATE
CJP
INSPECT BY UT
45°
3/16
NEW 1"Ø PRE-TENSIONED
BOLT ASSEMBLY
(TYP 12)
EXISTING 3/8" THK
MONOPOLE SHAFT
EXISTING STEP
BOLT CLIP
(TYP)
#CCI-SB-0100
NEW STEP BOLT
(TYP)
EXISTING SAFETY
CLIMB
24" MAX
HORIZONTAL SPREAD
BOTTOM FLANGE CONNECTION
EXISTING
MONOPOLE SHAFT
3/16
NEW CCI-SB-0100
STEP BOLT CLIP WELD DETAIL
NUT
LOCK WASHER
A325N BOLT
TYPICAL BOLT ASSEMBLY
NUT
FLAT WASHER
A325N BOLT
SEE NOTE 1
PRE-TENSIONED BOLT ASSEMBLY
90.8 FT ELEVATION
NOTES:
1. FULLY PRE-TENSION BOLTS USING THE "TURN OF NUT" METHOD IN ACCORDANCE WITH THE AISC STEEL CONSTRUCTION MANUAL (LATEST EDITION).
NO. DATE DESCRIPTION BY
REVISIONS
CROWN CASTLE
THIS DRAWING IS COPYRIGHTED AND IS THE SOLE PROPERTY OF CROWN CASTLE. IT IS PRODUCED SOLELY FOR USE BY CROWN CASTLE AND ITS AFFILIATES. REPRODUCTION OR USE OF THIS DRAWING AND/OR THE INFORMATION CONTAINED IN IT IS PROHIBITED WITHOUT THE WRITTEN PERMISSION OF CROWN CASTLE.
PROFESSIONAL ENGINEER
No. 9832916
MAGED
ABDEL-MESSIH
STATE OF UTAH
Maged Abdel-Messih
Maged Abdel-Messih
Digitally signed by Maged Abdel-Messih
Date: 2025.01.31 15:02:57 -05'00'
SITE NAME: SOUTH DAVIS
BU NUMBER: 845598
WO NUMBER: 2358934
SITE ADDRESS:
120 WEST 1000 NORTH
BOUNTIFUL, UT 84010
DAVIS COUNTY, USA
ENG/QA BY: DBS DATE: 01/24/25
DFT BY: EJB DATE: 01/27/25
DFT/QA BY: EJB DATE: 01/27/25
APRV'D BY: DBS DATE: 01/27/25
SCALE: N.T.S.
TOWER SECTION
S-6
REV
0

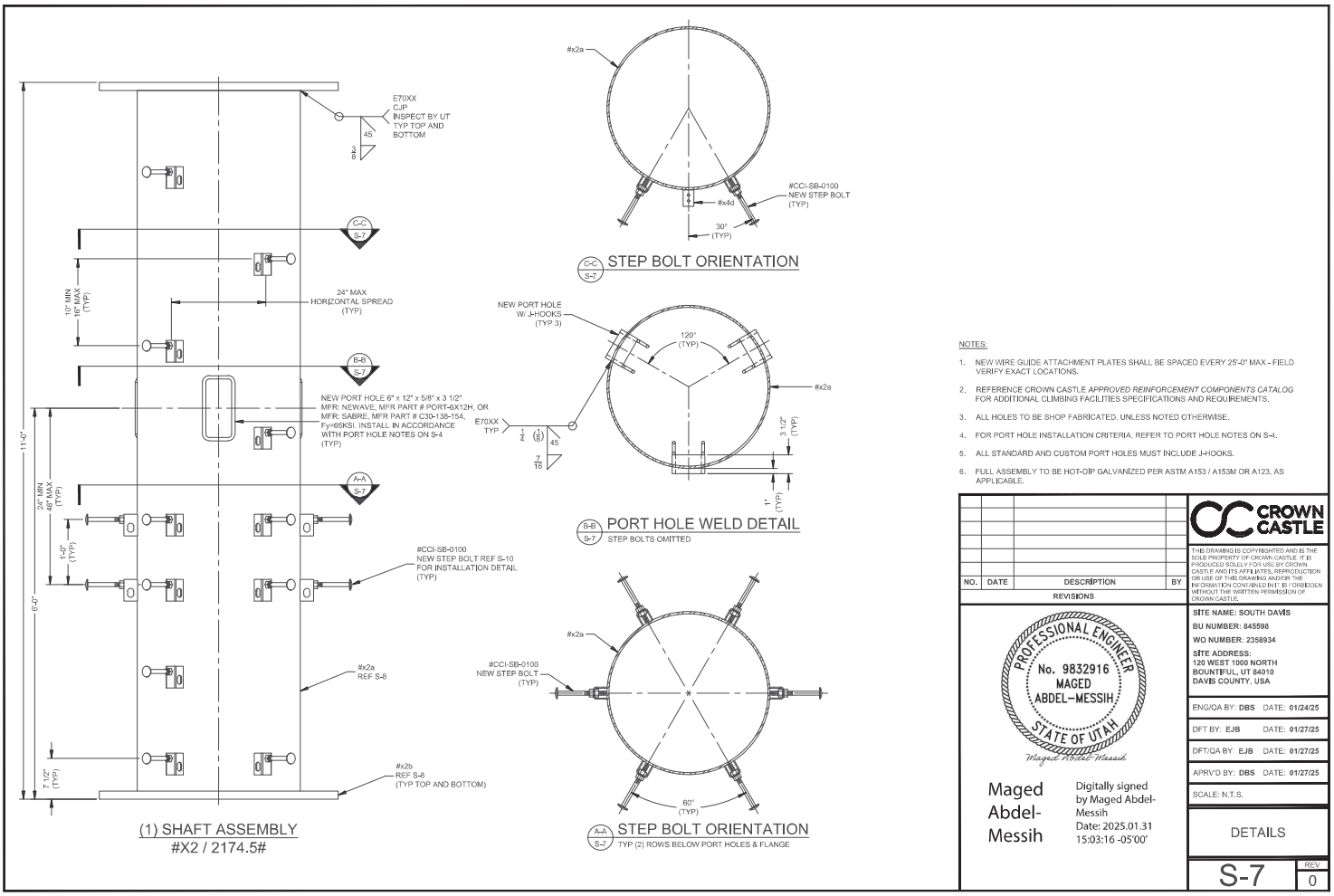
E70XX
CJP
INSPECT BY UT
TYP TOP AND
BOTTOM
45
24" MAX
HORIZONTAL SPREAD
(TYP)
NEW PORT HOLE 6" x 12" x 5/8" x 3 1/2"
MFR: NEWAVE, MFR PART # PORT-6X12H, OR
MFR: SABRE, MFR PART # C30-138-154,
Fy=65KSI. INSTALL IN ACCORDANCE
WITH PORT HOLE NOTES ON S-4
(TYP)
#CCI-SB-0100
NEW STEP BOLT REF S-10
FOR INSTALLATION DETAIL
(TYP)
#x2a
REF S-8
#x2b
REF S-8
(TYP TOP AND BOTTOM)
11'-0"
6'-0"
(1) SHAFT ASSEMBLY
#X2 / 2174.5#
#x2a
#x4d
#CCI-SB-0100
NEW STEP BOLT
(TYP)
30°
(TYP)
STEP BOLT ORIENTATION
NEW PORT HOLE
W/ J-HOOKS
(TYP 3)
120°
(TYP)
E70XX
TYP
3 1/2"
(TYP)
1"
(TYP)
PORT HOLE WELD DETAIL
STEP BOLTS OMITTED
#CCI-SB-0100
NEW STEP BOLT
(TYP)
60°
(TYP)
STEP BOLT ORIENTATION
TYP (2) ROWS BELOW PORT HOLES & FLANGE
NOTES:
1. NEW WIRE GUIDE ATTACHMENT PLATES SHALL BE SPACED EVERY 25'-0" MAX - FIELD VERIFY EXACT LOCATIONS.
2. REFERENCE CROWN CASTLE APPROVED REINFORCEMENT COMPONENTS CATALOG FOR ADDITIONAL CLIMBING FACILITIES SPECIFICATIONS AND REQUIREMENTS.
3. ALL HOLES TO BE SHOP FABRICATED, UNLESS NOTED OTHERWISE.
4. FOR PORT HOLE INSTALLATION CRITERIA, REFER TO PORT HOLE NOTES ON S-4.
5. ALL STANDARD AND CUSTOM PORT HOLES MUST INCLUDE J-HOOKS.
6. FULL ASSEMBLY TO BE HOT-DIP GALVANIZED PER ASTM A153 / A153M OR A123, AS APPLICABLE.
NO. DATE DESCRIPTION BY
REVISIONS
CROWN CASTLE
THIS DRAWING IS COPYRIGHTED AND IS THE SOLE PROPERTY OF CROWN CASTLE. IT IS PROVIDED SOLELY FOR USE BY CROWN CASTLE AND ITS AFFILIATES. REPRODUCTION OR USE OF THIS DRAWING AND/OR THE INFORMATION CONTAINED IN IT IS PROHIBITED WITHOUT THE WRITTEN PERMISSION OF CROWN CASTLE.
PROFESSIONAL ENGINEER
No. 9832916
MAGED
ABDEL-MESSIH
STATE OF UTAH
Maged Abdel-Messih
Maged Abdel-Messih
Digitally signed by Maged Abdel-Messih
Date: 2025.01.31 15:03:16 -05'00'
SITE NAME: SOUTH DAVIS
BU NUMBER: 845598
WO NUMBER: 2358934
SITE ADDRESS:
120 WEST 1000 NORTH
BOUNTIFUL, UT 84010
DAVIS COUNTY, USA
ENG/QA BY: DBS DATE: 01/24/25
DFT BY: EJB DATE: 01/27/25
DFT/QA BY: EJB DATE: 01/27/25
APRV'D BY: DBS DATE: 01/27/25
SCALE: N.T.S.
DETAILS
S-7
REV 0

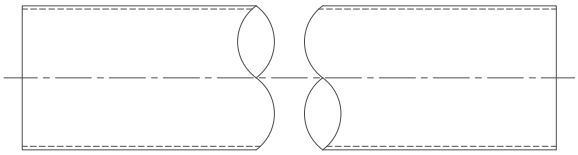

(1) P 30.000 x 0.375 x 10'-9" LONG (A53-B-35)
#x3a / 1276.7#

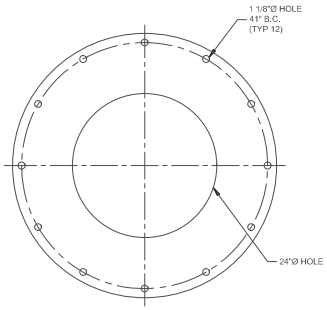

(3) PL 1 1/2 x 44Ø (A572-50)
(1) #X1 / 448.9#
(2) #x2b / 448.9#

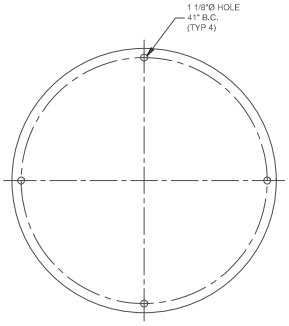

(1) PL 1/4 x 44Ø (A36)
#X3 / 107.4#

NOTES:

1. FABRICATION TOLERANCES: FRACTIONS ± 1/16"
ANGLES ± 1/2 DEGREE
DECIMALS ± .010"
BOLT HOLES ± 1/32"

2. ALL HOLES TO BE SHOP FABRICATED, UNLESS NOTED OTHERWISE.

NO.	DATE	DESCRIPTION	BY

REVISIONS

CROWN CASTLE

THIS DRAWING IS COPYRIGHTED AND IS THE SOLE PROPERTY OF CROWN CASTLE. IT IS PROVIDED SOLELY FOR USE BY CROWN CASTLE AND ITS AFFILIATES. REPRODUCTION OR USE OF THIS DRAWING AND/OR THE INFORMATION CONTAINED IN IT IS PROHIBITED WITHOUT THE WRITTEN PERMISSION OF CROWN CASTLE.

PROFESSIONAL ENGINEER
No. 9832916
MAGED ABDEL-MESSIH
STATE OF UTAH

Maged Abdel-Messih

Maged Abdel-Messih

Digitally signed by Maged Abdel-Messih
Date: 2025.01.31 15:03:35 -05'00'

SITE NAME: SOUTH DAVIS
BU NUMBER: 845598
WO NUMBER: 2358934
SITE ADDRESS:
120 WEST 1000 NORTH
BOUNTIFUL, UT 84010
DAVIS COUNTY, USA

ENG/QA BY: DBS DATE: 01/24/25
DFT BY: EJB DATE: 01/27/25
DFT/QA BY: EJB DATE: 01/27/25
APRV'D BY: DBS DATE: 01/27/25
SCALE: N.T.S.

DETAILS

S-8 REV 0

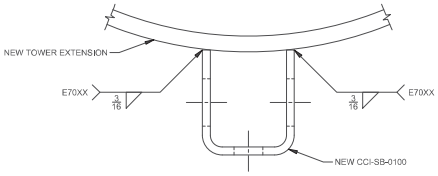

STEP BOLT CLIP WELD DETAIL

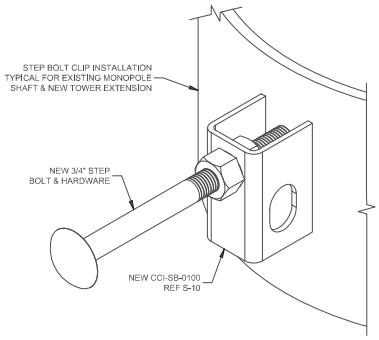

STEP BOLT CLIP
INSTALLATION DETAIL

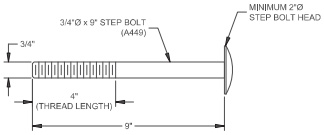

STEP BOLT

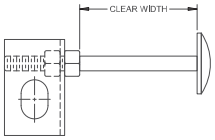

STEP BOLT DETAIL

NOTES:

1. STEP BOLT CLIP WELDS ARE SUBJECT TO AWS D1.1 AND MUST BE INSPECTED BY A CWI. REFER TO DOCUMENT "ENG-STD-10069 GC CWI REQUIREMENT STANDARD" FOR CWI REQUIREMENTS.
2. STEP BOLT CLIPS SHALL BE SHOP WELDED.
3. STEP BOLT CLIPS SHALL BE WELDED IN PLACE PRIOR TO HOT DIP GALVANIZING THE WELDMENT.
4. CONTRACTOR SHALL USE ALL NEW STEP BOLTS AND HARDWARE.
5. CENTER TO CENTER STAGGERED SPACING SHOULD BE MATCHED TO EXISTING FIELD CONDITIONS. STAGGERED SPACING SHALL BE A MINIMUM OF 10" AND MAXIMUM OF 16", IN THE VERTICAL DIRECTION.
6. HORIZONTAL SPREAD IS NOT TO EXCEED 24".
7. STEP BOLT MATERIAL SHALL MEET THE REQUIREMENTS OF ASTM A449 AND SHALL BE TESTED AS FINISHED STEP BOLTS AT TEST FREQUENCY P (PIECE TESTING) OF ASTM A673 TO MEET MINIMUM ABSORBED ENERGY REQUIREMENT AT -20 DEGREES F [-29 DEGREES C] OF 15 FT-LBS [20 J] AVERAGE FOR 3 SPECIMENS AND A MINIMUM OF 12 FT-LBS [16 J] FOR ANY 1 SPECIMEN IN ACCORDANCE WITH ASTM A370.
8. STEP BOLTS SHALL BE INSTALLED USING DOUBLE NUTS. A STEP BOLT INSTALLED IN A STEP BOLT CLIP SHALL BE TURNED WITH THE OUTER NUT LOOSE UNTIL THE END OF THE STEP BOLT MAKES CONTACT WITH THE SUPPORTING MEMBER. THE OUTER STEP BOLT NUT SHALL THEN BE TIGHTENED TO A SNUG TIGHT CONDITION AND PRETENSIONED BY ROTATING THE OUTER NUT 1/3 TURN.
9. THE DEFAULT STEP BOLT CLIP SHALL BE USED WHERE POSSIBLE ON NEW REINFORCING ELEMENTS. IF FIT-UP PROHIBITS ITS USE, THE ALTERNATIVE STEP BOLT CLIP OR NEXGEN2 STEP BOLT ADAPTER SHALL BE USED IN THESE LOCATIONS.

NO.	DATE	DESCRIPTION	BY

REVISIONS

CROWN CASTLE

THIS DRAWING IS COPYRIGHTED AND IS THE SOLE PROPERTY OF CROWN CASTLE. IT IS PROVIDED SOLELY FOR USE BY CROWN CASTLE AND ITS AFFILIATES. REPRODUCTION OR USE OF THIS DRAWING AND/OR THE INFORMATION CONTAINED IN IT IS PROHIBITED WITHOUT THE WRITTEN PERMISSION OF CROWN CASTLE.

PROFESSIONAL ENGINEER
No. 9832916
MAGED
ABDEL-MESSIH
STATE OF UTAH

Maged Abdel-Messih

Maged Abdel-Messih

Digitally signed by Maged Abdel-Messih
Date: 2025.01.31 15:03:59 -05'00'

SITE NAME: SOUTH DAVIS
BU NUMBER: 845598
WO NUMBER: 2358934
SITE ADDRESS:
120 WEST 1000 NORTH
BOUNTIFUL, UT 84010
DAVIS COUNTY, USA

ENG/QA BY: DBS DATE: 01/24/25
DFT BY: EJB DATE: 01/27/25
DFT/QA BY: EJB DATE: 01/27/25
APRV'D BY: DBS DATE: 01/27/25
SCALE: N.T.S.

DETAILS

S-9 REV 0

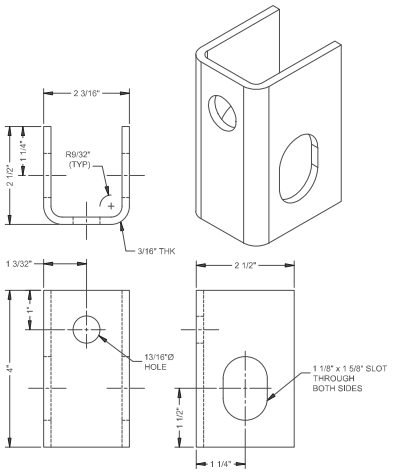

DEFAULT STEP BOLT CLIP WITH ANCHORAGE POINT (A572-50)

NOTE:

1. STEP BOLT CLIP HOLES SHALL BE SHOP DRILLED OR PUNCHED.
2. ACCEPTABLE SUBSTITUTES FOR ASTM A572-50 INCLUDE A36, AND ASTM A1011/A1018 HSLAS GRADE 50 CLASS 1 OR 2.

NO.	DATE	DESCRIPTION	BY

REVISIONS

CROWN CASTLE

THIS DRAWING IS COPYRIGHTED AND IS THE SOLE PROPERTY OF CROWN CASTLE. IT IS PRODUCED SOLELY FOR USE BY CROWN CASTLE AND ITS AFFILIATES. REPRODUCTION OR USE OF THIS DRAWING AND/OR THE INFORMATION CONTAINED IN IT IS PROHIBITED WITHOUT THE WRITTEN PERMISSION OF CROWN CASTLE.

PROFESSIONAL ENGINEER
No. 9832916
MAGED
ABDEL-MESSIH
STATE OF UTAH

Maged Abdel-Messih

Maged Abdel-Messih

Digitally signed by Maged Abdel-Messih
Date: 2025.01.31 15:04:30 -05'00'

SITE NAME: SOUTH DAVIS
BU NUMBER: 845598
WO NUMBER: 2358934
SITE ADDRESS:
120 WEST 1000 NORTH
BOUNTIFUL, UT 84010
DAVIS COUNTY, USA

ENG/QA BY: DBS DATE: 01/24/25
DFT BY: EJB DATE: 01/27/25
DFT/QA BY: EJB DATE: 01/27/25
APRV'D BY: DBS DATE: 01/27/25
SCALE: N.T.S.

CCI-SB-0100

S-10 REV 0